8CXT

8Ω

Coaxials - 8.0 Inches

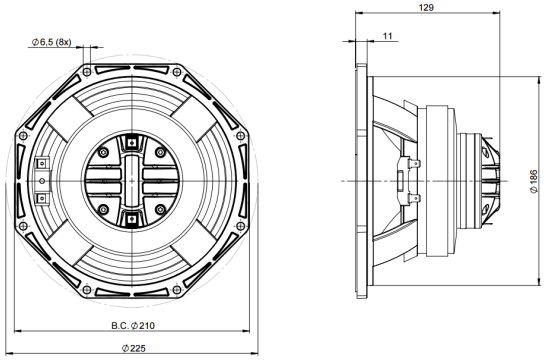

- 400 W continuous program power capacity
- 100° nominal coverage
- 75 - 20000 Hz response
- 94 dB sensitivity
- 34.5 mm (1.35”) HF unit exit diameter

B&C Speakers s.p.a.

Via Poggiomoro, 1 - Loc. Vallina, 50012 Bagno a Ripoli (FI) - ITALY - Tel. +39 055 65721 - Fax +39 055 6572312 - mail@bcspeakers.com

8CXT

Coaxials- 8.0 Inches

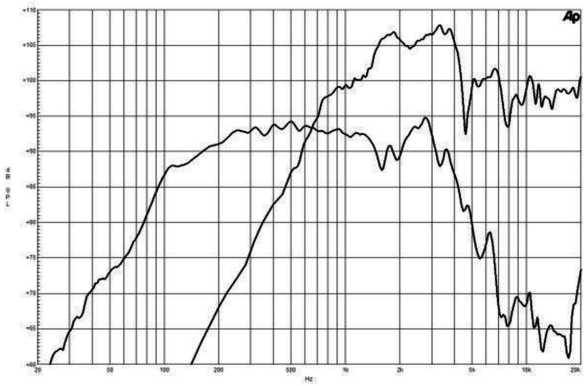

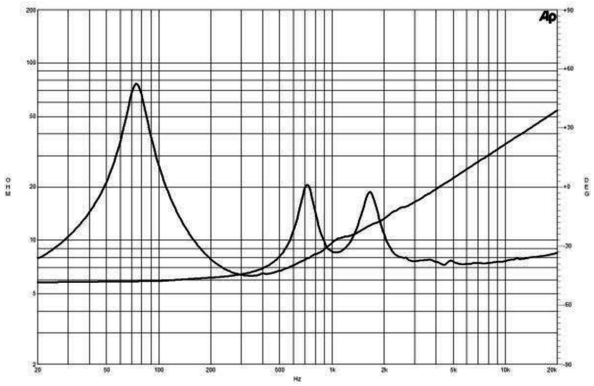

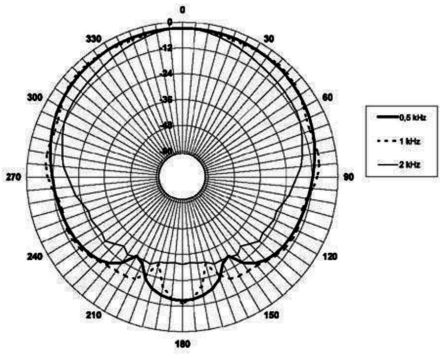

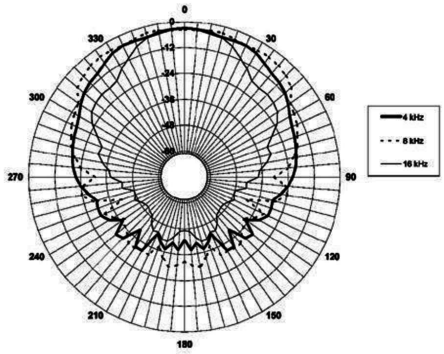

SPECIFICATIONS

Nominal Diameter	210 mm (8.0 in)
Nominal Impedance	8 Ω
Minimum Impedance LF	6.3 Ω
Minimum Impedance HF	7.7 Ω
Frequency Range	75 - 20000 Hz
Dispersion Angle[1]	100 °
Woofer Cone Treatment	WP Waterproof Front Side
Magnet Material	Ferrite (LF) - Neodym. Ring (HF)

SPECIFICATIONS LF UNIT

LF Sensitivity[2]	94.0 dB
LF Nominal Power Handling[3]	200 W
LF Continuous Power Handling[4]	400 W
LF Voice Coil Diameter	52 mm (2.0 in)
LF Winding Material	Copper
LF Flux Density	1.05 T
Former Material	Kapton
Winding Depth	16.5 mm (0.65 in)
Magnetic Gap Depth	8.0 mm (0.31 in)

SPECIFICATIONS HF UNIT

HF Sensitivity[5]	103.0 dB
HF Nominal Power Handling[6]	50 W
HF Continuous Power Handling[7]	100 W
HF Voice Coil Diameter	44 mm (1.7 in)
HF Winding Material	Aluminium
HF Flux Density	1.8 T
Diaphragm Material	Titanium
Recommended Crossover[8]	2.0 kHz
Inductance	0.11 mH

PARAMETERS

Resonance Frequency	76 Hz
Re	5.1 Ω
Qes	0.36
Qms	5.0
Qts	0.34
Vas	11.5 dm^3 (0.4 ft^3)
Sd	220.0 cm^2 (34.1 in^2)
η_0	1.4 %
Xmax	± 6.0 mm
Xvar	± 6.0 mm
Mms	25.0 g
Bl	13.0 Txm
Le	1.0 mH
EBP	211 Hz

MOUNTING AND SHIPPING INFO

Overall Diameter	225 mm (8.8 in)
Bolt Circle Diameter	210 mm (8.3 in)
Baffle Cutout Diameter	187 mm (7.4 in)
Depth	129 mm (5.1 in)
Flange and Gasket Thickness	11 mm (0.4 in)
Net Weight	4.0 kg (8.82 lb)
Shipping Weight	4.6 kg (10.14 lb)
Shipping Box	295x314x175 mm (11.61x12.36x6.89 in)

SERVICE KIT

LF recone kit	RCK008CXT8
MF replacement diaphragm	MMD400TN8

B&C Speakers s.p.a.

Via Poggiomoro, 1 - Loc. Vallina, 50012 Bagno a Ripoli (FI) - ITALY - Tel. +39 055 65721 - Fax +39 055 6572312 - mail@bcspeakers.com

1. Included by –6 dB down points.
2. Applied RMS Voltage is set to 2.83V.
3. 2 hours test made with continuous pink noise signal within the range Fs-10Fs. Power calculated on rated minimum impedance. Loudspeaker in free air.
4. Power on Continuous Program is defined as 3 dB greater than the Nominal rating.
5. Applied RMS Voltage is set to 2.83V.
6. 2 hour test made with continuous pink noise signal within the range from the recommended crossover frequency to 20 kHz. Power calculated on rated minimum impedance. Loudspeaker in free air.
7. Power on Continuous Program is defined as 3 dB greater than the Nominal rating.
8. 12 dB/oct. or higher slope high-pass filter.

B&C Speakers s.p.a.

Via Poggiomoro, 1 - Loc. Vallina, 50012 Bagno a Ripoli (FI) - ITALY - Tel. +39 055 65721 - Fax +39 055 6572312 - mail@bcspeakers.com