14CXN76 8 Ω

- 800 W continuous program power capacity
- 80° nominal coverage
- 45 - 18000 Hz response
- 100 dB sensitivity
- Single Neodymium magnet assembly
- Aluminium demodulating ring for very low distortion





B&C Speakers S.p.A. Via Poggiomoro, 1 - Loc. Vallina, 50012 Bagno a Ripoli (FI) | ITALY
Tel. +39 055 65721 | Fax +39 055 6572312 | mail@bcspeakers.com

14CXN76 8 Ω

GENERAL

Nominal Diameter	**343 mm (13.5 in)**
Nominal Impedance	**8 Ω**
Frequency Range	**45 Hz - 18000 Hz**
Dispersion Angle Included by –6 dB down points.	**80 °**

PARAMETERS

Fs	**45 Hz**
Re	**5.2 Ω**
Qes	**0.29**
Qms	**8.5**
Qts	**0.28**
Vas	**131 dm³ (4.63 ft³)**
Sd	**707 cm² (109.59 in²)**
η0	**4 %**
Xvar	**8 mm**
Mms	**67 g**
Bl	**18.4 Tm**
Le	**1 mH**
EBP	**155 Hz**

SPECIFICATIONS HF UNIT

Nominal Diameter	**343 mm (13.5 in)**
Nominal Impedance	**8 Ω**
Minimum Impedance	**8.2 Ω**
Nominal Power Handling 2 hour test made with continuous pink noise signal within the range from the recommended crossover frequency to 20 kHz. Power calculated on rated minimum impedance. Loudspeaker in free air.	**80 W**
Continuous Power Handling Power on Continuous Program is defined as 3 dB greater than the Nominal rating.	**160 W**
Sensitivity Applied RMS Voltage is set to 2.83V.	**105 dB**
Recommended Crossover 12 dB/oct. or higher slope high-pass filter.	**1.2 kHz**
Voice Coil Diameter	**75 mm (3 in)**
Winding Material	**Aluminium**
Inductance	**0.14 mH**
Flux Density	**1.8 T**
Diaphragm Material	**Polyester/Titanium**

SPECIFICATIONS LF UNIT

Nominal Diameter	**343 mm (13.5 in)**
Nominal Impedance	**8 Ω**
Minimum Impedance	**6.5 Ω**
Nominal Power Handling 2 hours test made with continuous pink noise signal within the range Fs-10Fs. Power calculated on rated minimum impedance. Loudspeaker in free air.	**400 W**
Continuous Power Handling Power on Continuous Program is defined as 3 dB greater than the Nominal rating.	**800 W**
Sensitivity Applied RMS Voltage is set to 2.83V.	**100 dB**
Voice Coil Diameter	**76 mm (3 in)**
Winding Material	**Copper**
Former Material	**Glass Fibre**
Winding Depth	**16.5 mm (0.65 in)**
Magnetic Gap Depth	**9 mm (0.35 in)**
Flux Density	**1.05 T**
Woofer Cone Treatment	**WP Waterproof Front Side**

DESIGN

Magnet Material	**Neodymium Ring**
Woofer Cone Treatment	**WP Waterproof Front Side**

MOUNTING AND SHIPPING INFO

Overall Diameter	**359 mm (14.13 in)**
Bolt Circle Diameter	**343 mm (13.5 in)**
Baffle Cutout Diameter	**323 mm (12.72 in)**
Depth	**188 mm (7.4 in)**
Flange and Gasket Thickness	**12 mm (0.47 in)**
Net Weight	**5.6 kg (12.35 lb)**
Shipping Units	**1 pcs**
Shipping Weight	**6.9 kg (15.21 lb)**
Shipping Box	**425x425x224 mm (16.73x16.73x8.82 in)**

SERVICE KITS

HF replacement-diaphragm	**MMD9028M**
LF recone-kits	**RCK14CXN768**

B&C Speakers S.p.A. Via Poggiomoro, 1 - Loc. Vallina, 50012 Bagno a Ripoli (FI) | ITALY
Tel. +39 055 65721 | Fax +39 055 6572312 | mail@bcspeakers.com

14CXN76 8 Ω

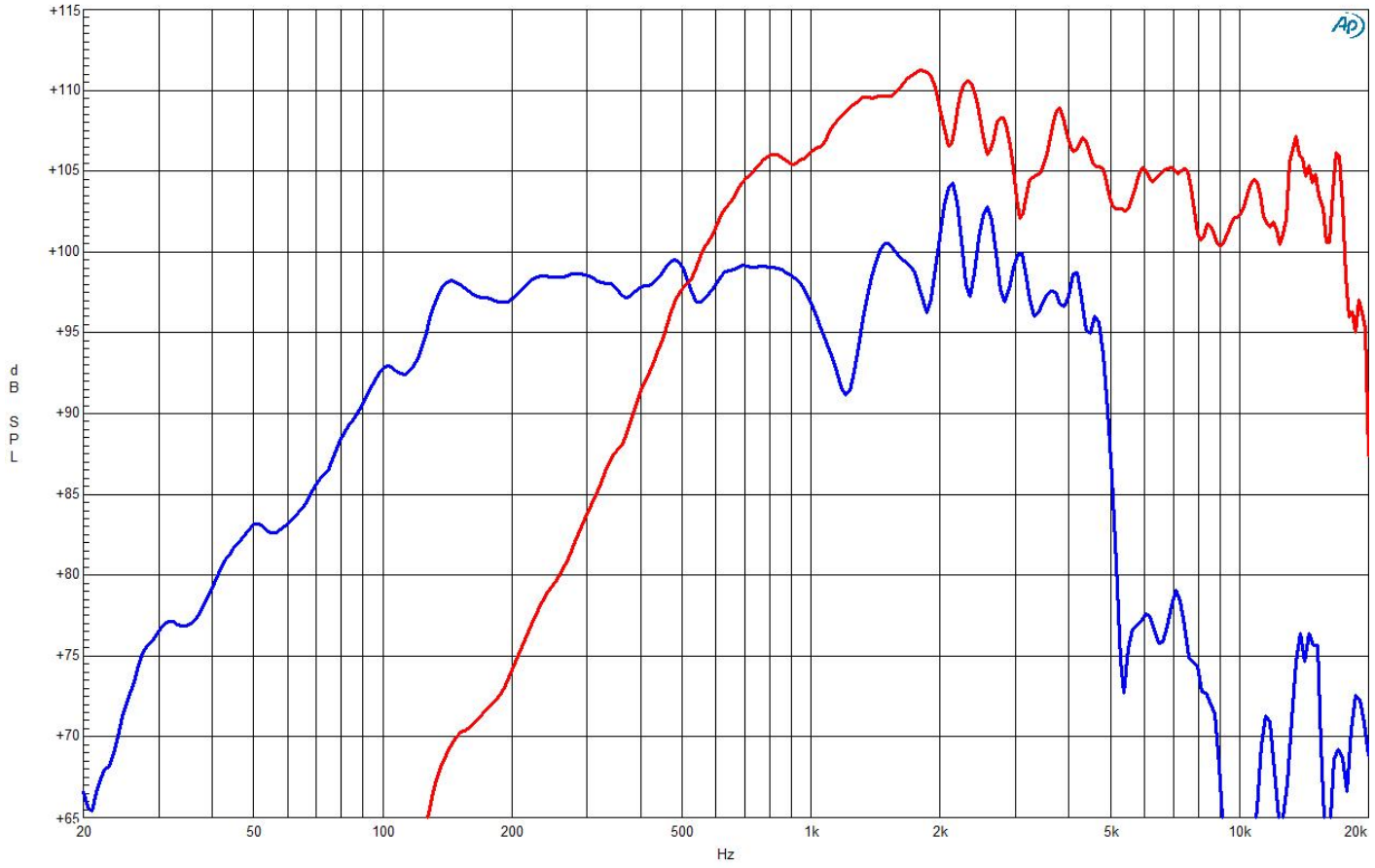

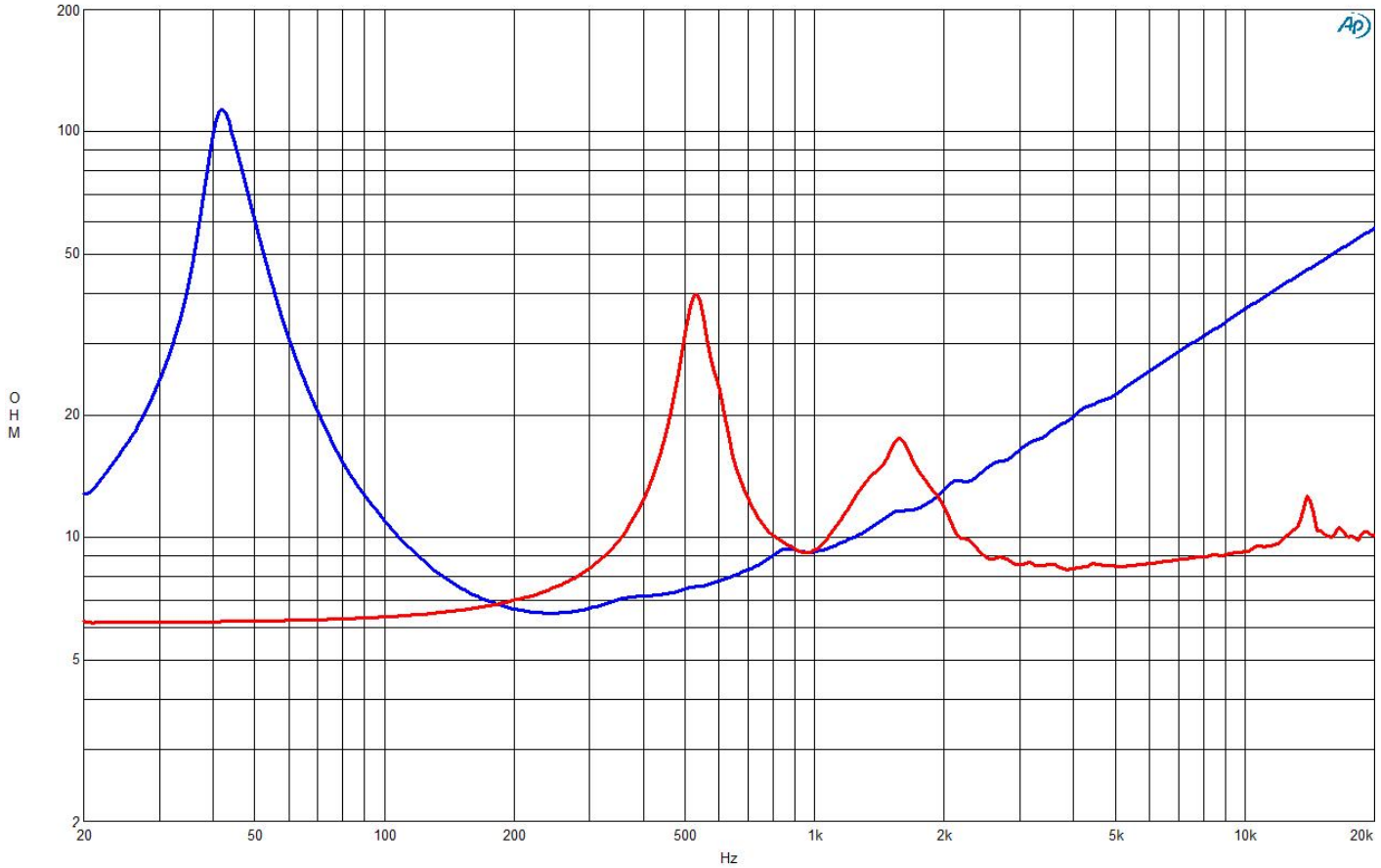

B&C Speakers S.p.A. Via Poggiomoro, 1 - Loc. Vallina, 50012 Bagno a Ripoli (FI) | ITALY
Tel. +39 055 65721 | Fax +39 055 6572312 | mail@bcspeakers.com

14CXN76 8 Ω

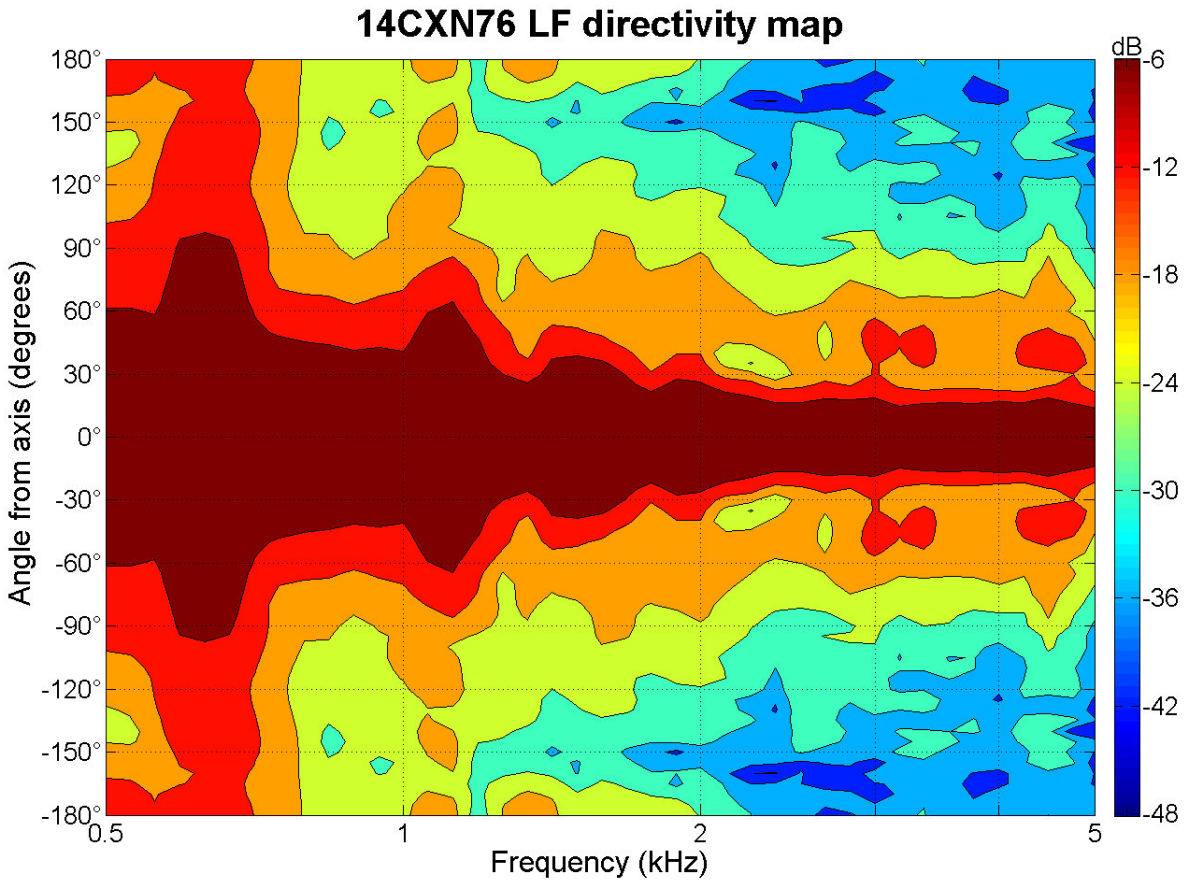

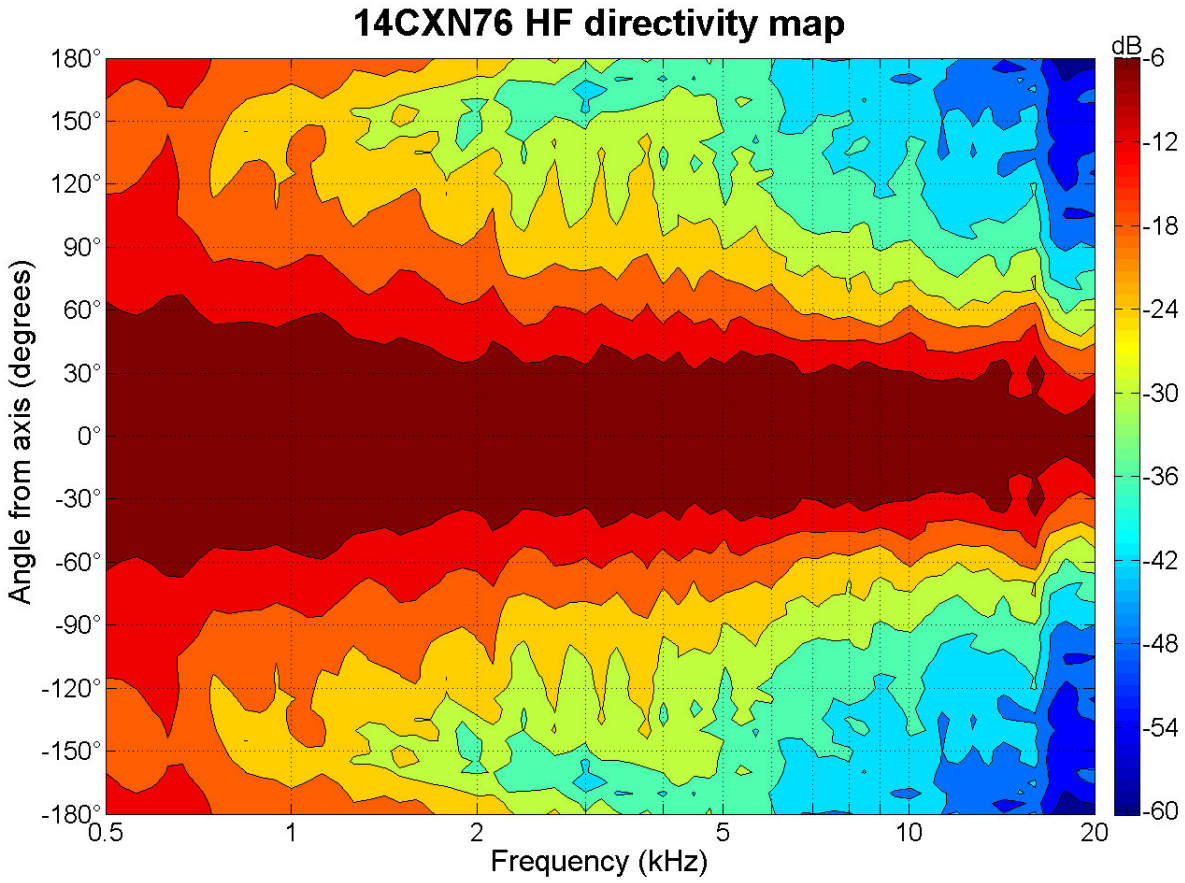

B&C Speakers S.p.A. Via Poggiomoro, 1 - Loc. Vallina, 50012 Bagno a Ripoli (FI) | ITALY
Tel. +39 055 65721 | Fax +39 055 6572312 | mail@bcspeakers.com

14CXN76 8 Ω

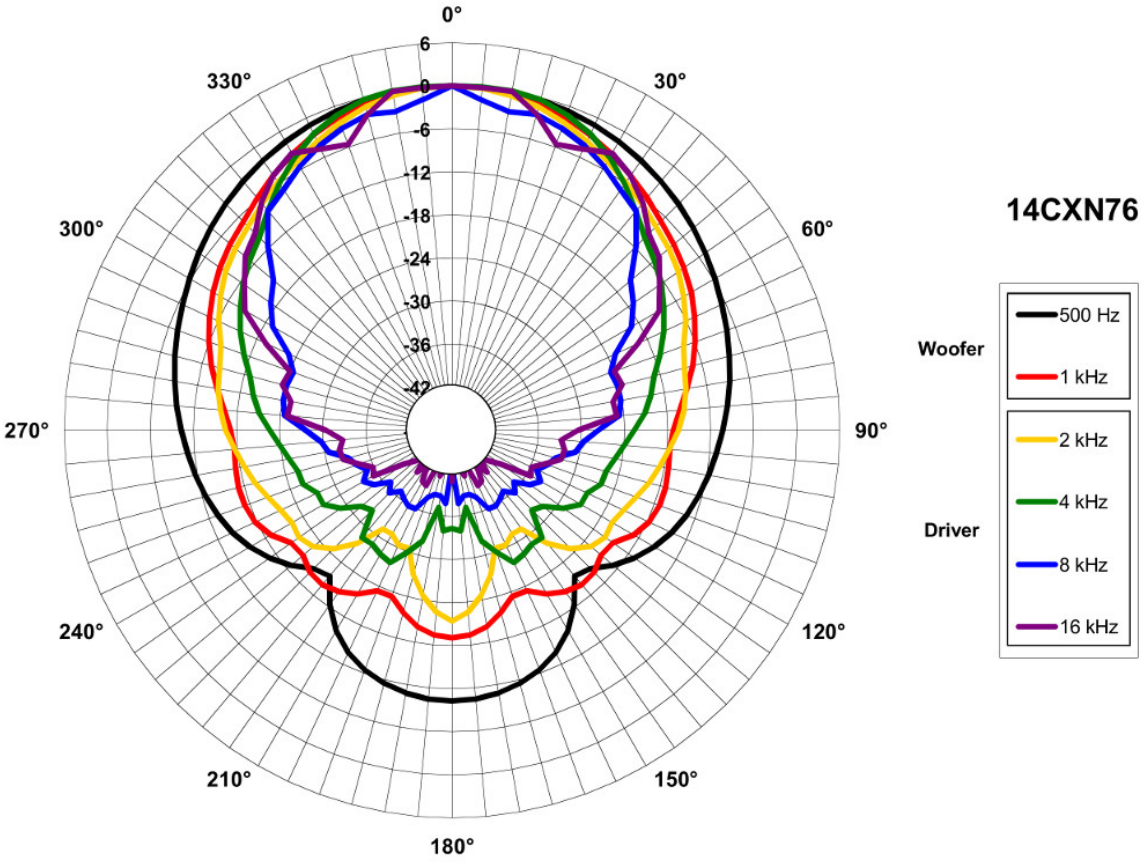

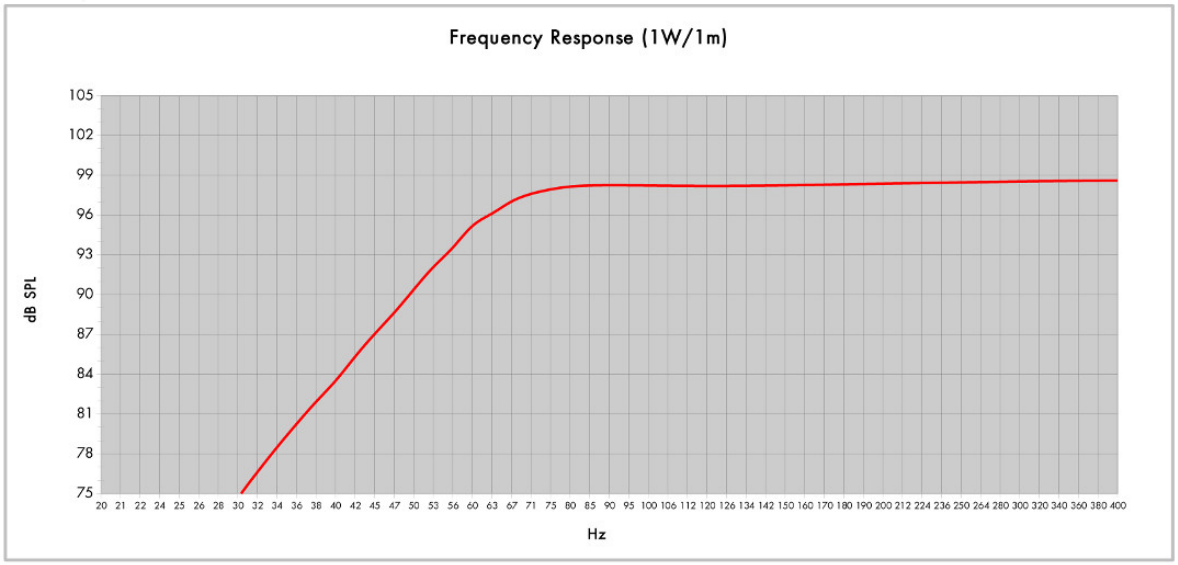

Model:	14CXN76		
Enclosure Type:	Bass Reflex	Configuration:	One Driver
Internal Net Volume (Litres):	65	QB:	7
Tuning Frequency (Hz):	60	Port Area (cm²):	222,3
Frequency (-3 dB) (Hz):	61,7	Port Length (cm):	13,8
Frequency (-10 dB) (Hz):	47,3		

B&C Speakers S.p.A. Via Poggiomoro, 1 - Loc. Vallina, 50012 Bagno a Ripoli (FI) | ITALY
Tel. +39 055 65721 | Fax +39 055 6572312 | mail@bcspeakers.com

14CXN76 8 Ω

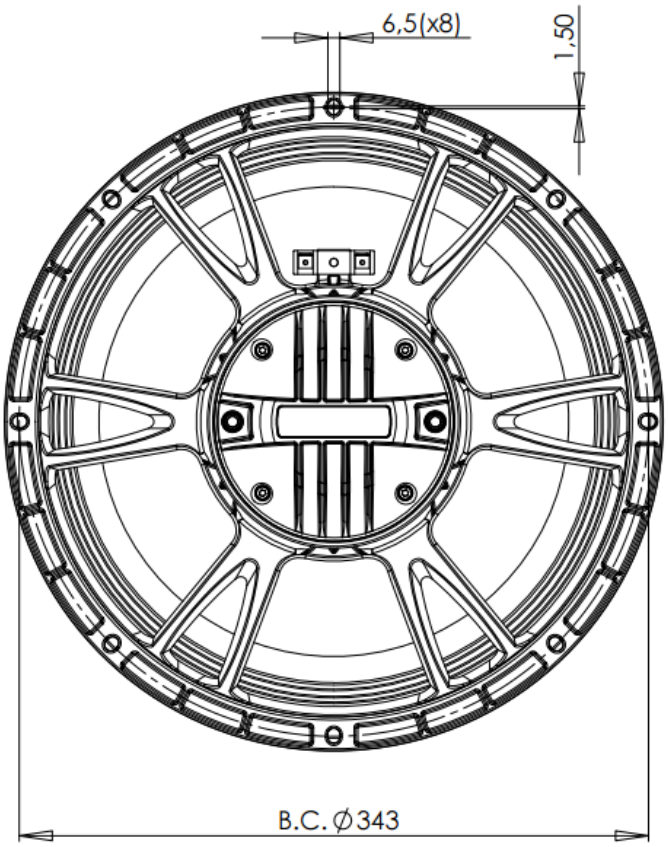

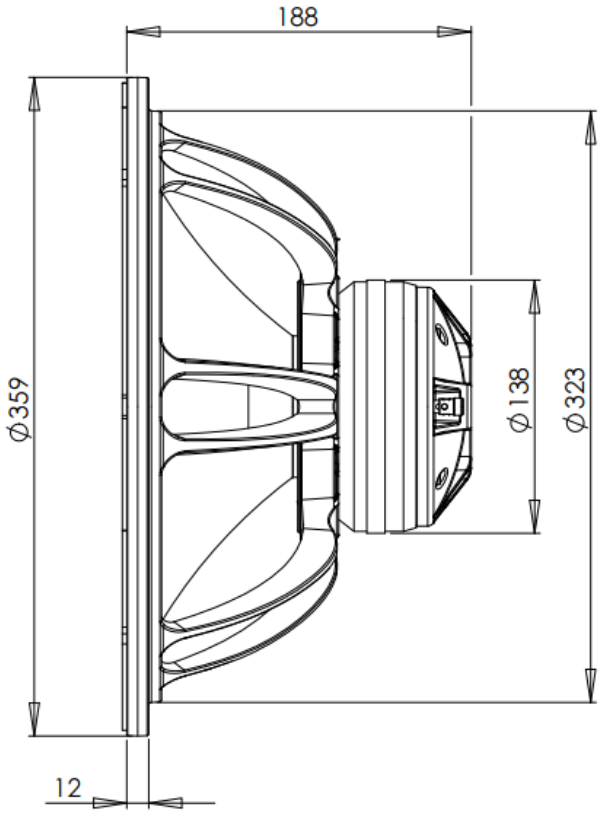

B&C Speakers S.p.A. Via Poggiomoro, 1 - Loc. Vallina, 50012 Bagno a Ripoli (FI) | ITALY
Tel. +39 055 65721 | Fax +39 055 6572312 | mail@bcspeakers.com