15CXN88 8 Ω

- 1000 W continuous program power capacity
- 80° nominal coverage
- 45 - 18000 Hz response
- 100 dB sensitivity
- Single Neodymium magnet assembly
- Aluminium demodulating ring allows a very low distortion figure
- Double spider with optimized compliance

Continuing our never-ending quest for higher output, we now offer our popular single neodymium magnet coaxials with larger voice coils for increased power handling. A significant increase in magnet mass also improves sensitivity and cone control, while integrating our latest compression driver technologies improves sound quality and durability in the HF as well. For high output applications where fidelity at maximum SPL is the primary concern, consider the 15CXN88, with 3.5” LF and 3” HF voice coils. Power handling has increased to 1000W, while also improving nearly every other parameter (including Xvar) relative to our established 3” coil CXN76 series.





B&C Speakers S.p.A. Via Poggiomoro, 1 - Loc. Vallina, 50012 Bagno a Ripoli (FI) | ITALY
Tel. +39 055 65721 | Fax +39 055 6572312 | mail@bcspeakers.com

15CXN88 8 Ω

GENERAL

Nominal Diameter	**380 mm (15 in)**
Nominal Impedance	**8 Ω**
Frequency Range	**45 Hz - 18000 Hz**
Dispersion Angle Included by –6 dB down points.	**80 °**

PARAMETERS

Fs	**47 Hz**
Re	**4.6 Ω**
Qes	**0.31**
Qms	**12.6**
Qts	**0.3**
Vas	**124 dm³ (4.38 ft³)**
Sd	**855 cm² (132.53 in²)**
η0	**4 %**
Xvar	**9.5 mm**
Mms	**94 g**
Bl	**20.15 Tm**
Le	**0.95 mH**
EBP	**152 Hz**

SPECIFICATIONS HF UNIT

Nominal Diameter	**380 mm (15 in)**
Nominal Impedance	**8 Ω**
Minimum Impedance	**8.5 Ω**
Nominal Power Handling 2 hour test made with continuous pink noise signal within the range from the recommended crossover frequency to 20 kHz. Power calculated on rated minimum impedance. Loudspeaker in free air.	**80 W**
Continuous Power Handling Power on Continuous Program is defined as 3 dB greater than the Nominal rating.	**160 W**
Sensitivity Applied RMS Voltage is set to 2.83V.	**106 dB**
Recommended Crossover 12 dB/oct. or higher slope high-pass filter.	**1.2 kHz**
Voice Coil Diameter	**75 mm (3 in)**
Winding Material	**Aluminium**
Inductance	**0.14 mH**
Flux Density	**1.75 T**
Diaphragm Material	**Titanium**

SPECIFICATIONS LF UNIT

Nominal Diameter	**380 mm (15 in)**
Nominal Impedance	**8 Ω**
Minimum Impedance	**5.8 Ω**
Nominal Power Handling 2 hours test made with continuous pink noise signal within the range Fs-10Fs. Power calculated on rated minimum impedance. Loudspeaker in free air.	**500 W**
Continuous Power Handling Power on Continuous Program is defined as 3 dB greater than the Nominal rating.	**1000 W**
Sensitivity Applied RMS Voltage is set to 2.83V.	**100 dB**
Voice Coil Diameter	**88 mm (3.5 in)**
Winding Material	**Aluminium**
Former Material	**Glass Fibre**
Winding Depth	**22 mm (0.87 in)**
Magnetic Gap Depth	**11 mm (0.43 in)**
Flux Density	**1.2 T**
Woofer Cone Treatment	**WP Waterproof Front Side**

DESIGN

Surround Shape	**Triple Roll**
Magnet Material	**Neodymium Ring**
Woofer Cone Treatment	**WP Waterproof Front Side**

MOUNTING AND SHIPPING INFO

Overall Diameter	**393 mm (15.47 in)**
Bolt Circle Diameter	**374 mm (14.72 in)**
Baffle Cutout Diameter	**356 mm (14.02 in)**
Depth	**208 mm (8.19 in)**
Flange and Gasket Thickness	**15 mm (0.59 in)**
Net Weight	**7.65 kg (16.87 lb)**
Shipping Units	**1 pcs**
Shipping Weight	**9.25 kg (20.39 lb)**
Shipping Box	**500x495x275 mm (19.69x19.49x10.83 in)**

CROSSOVER

FBCXN88	**8Ω**

SERVICE KITS

HF replacement-diaphragm	**MMD3DTN8M**
LF recone-kits	**RCK15CXN888**

B&C Speakers S.p.A. Via Poggiomoro, 1 - Loc. Vallina, 50012 Bagno a Ripoli (FI) | ITALY
Tel. +39 055 65721 | Fax +39 055 6572312 | mail@bcspeakers.com

15CXN88 8 Ω

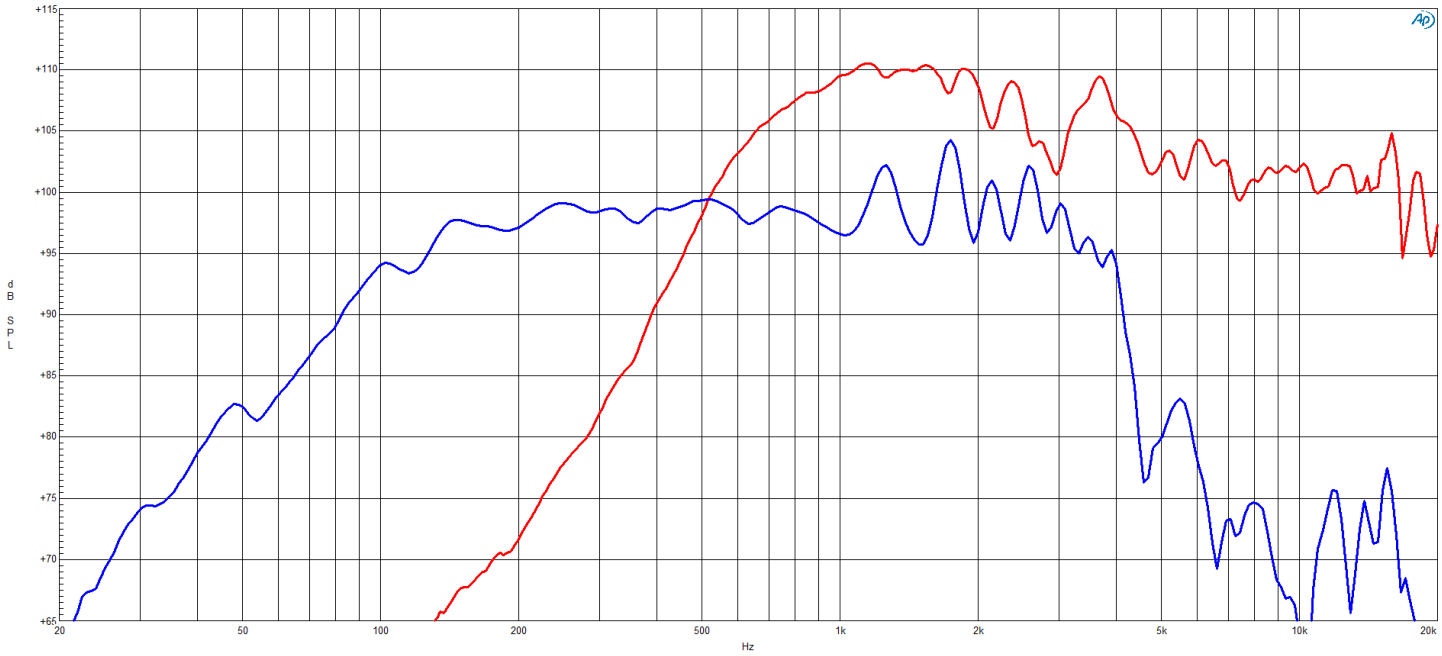
dB SPL
+115
+110
+105
+100
+95
+90
+85
+80
+75
+70
+65
20
50
100
200
500
1k
2k
5k
10k
20k
Hz

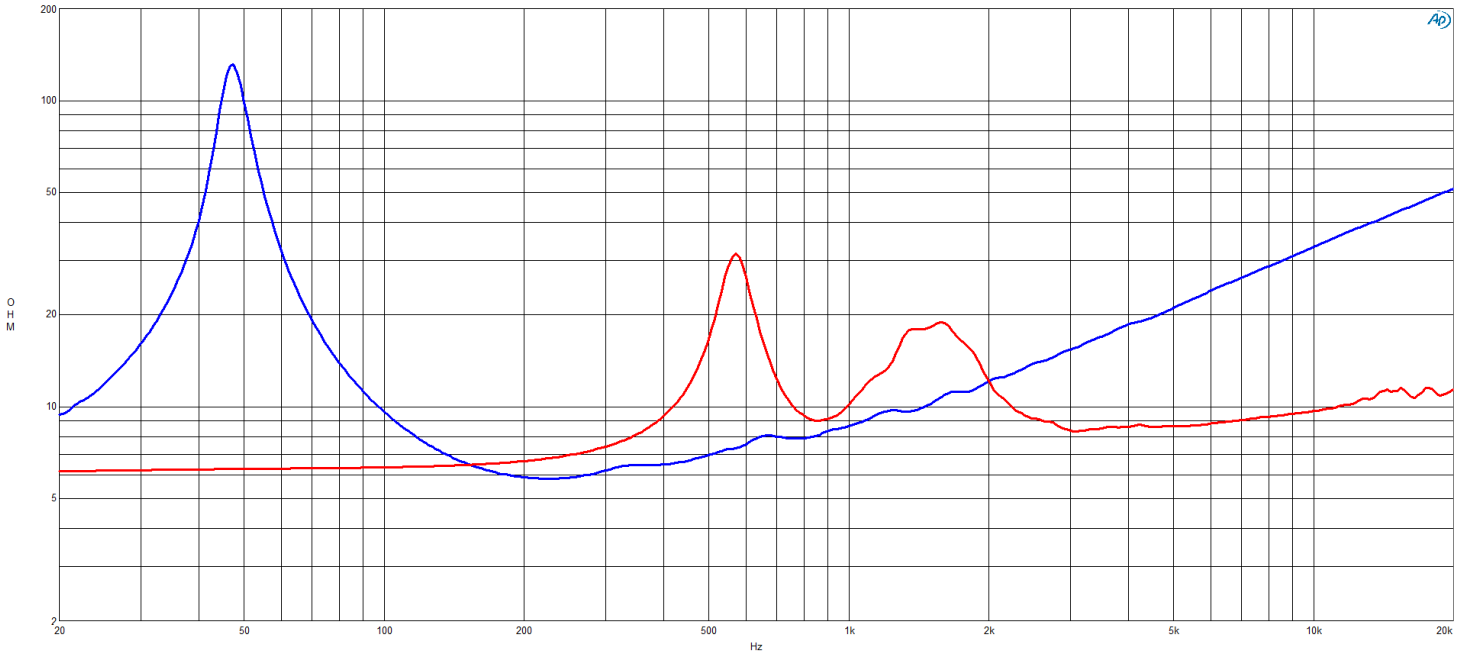
OHM
200
100
50
20
10
5
2
20
50
100
200
500
1k
2k
5k
10k
20k
Hz

15CXN88 8 Ω

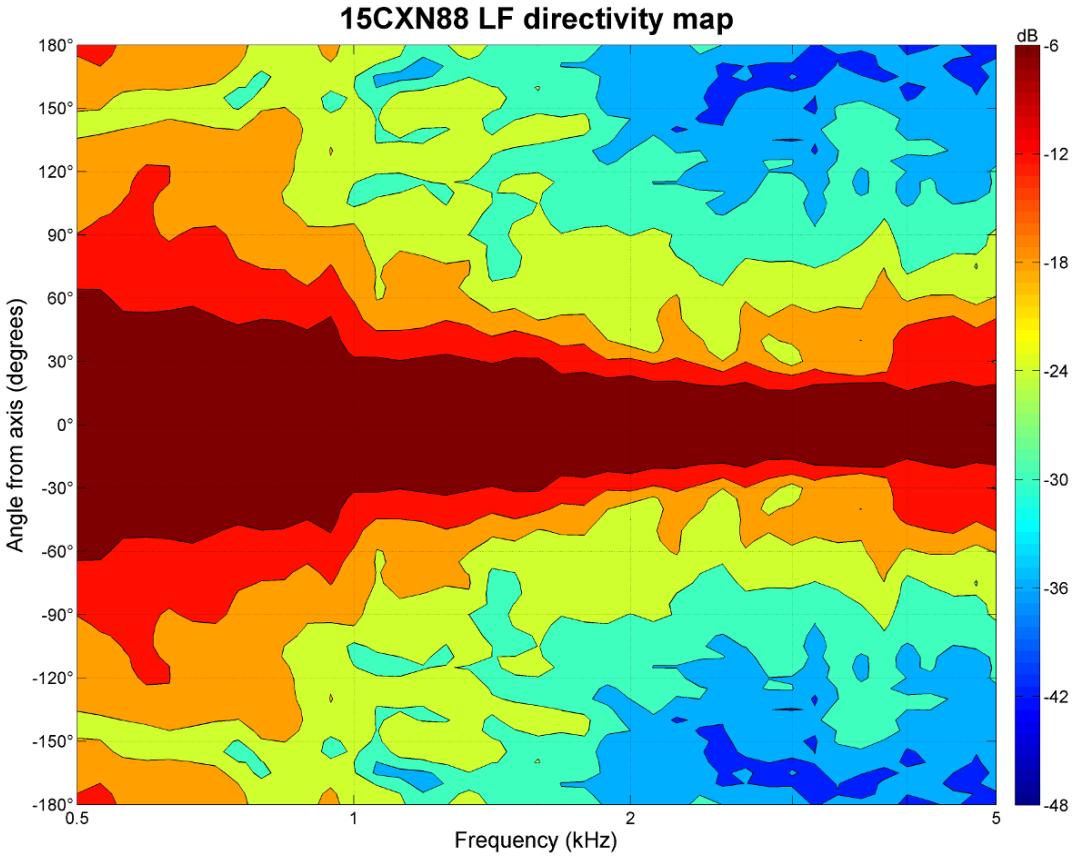

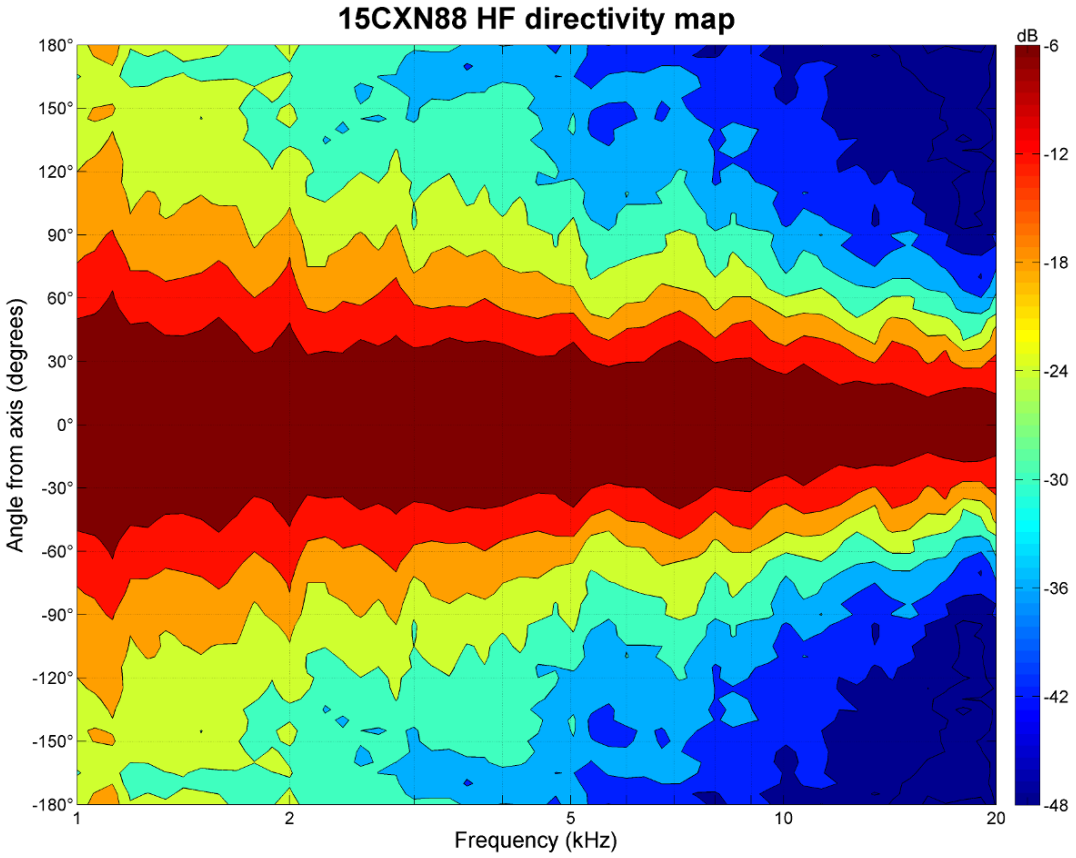

B&C Speakers S.p.A. Via Poggiomoro, 1 - Loc. Vallina, 50012 Bagno a Ripoli (FI) | ITALY
Tel. +39 055 65721 | Fax +39 055 6572312 | mail@bcspeakers.com

15CXN88 8 Ω

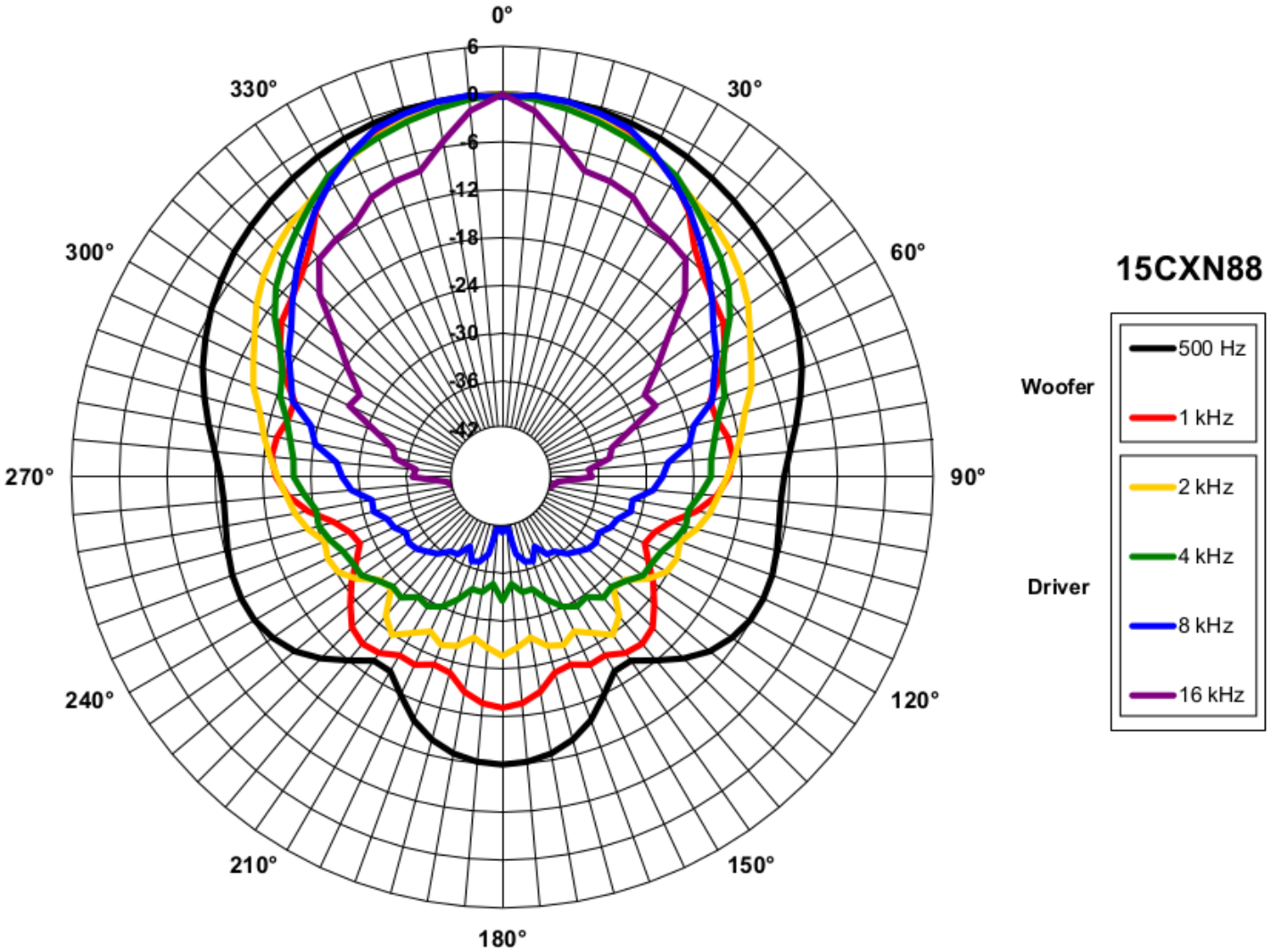
0°
30°
60°
90°
120°
150°
180°
210°
240°
270°
300°
330°
6
0
-6
-12
-18
-24
-30
-36
-42
15CXN88
Woofer
Driver
500 Hz
1 kHz
2 kHz
4 kHz
8 kHz
16 kHz

15CXN88 8 Ω

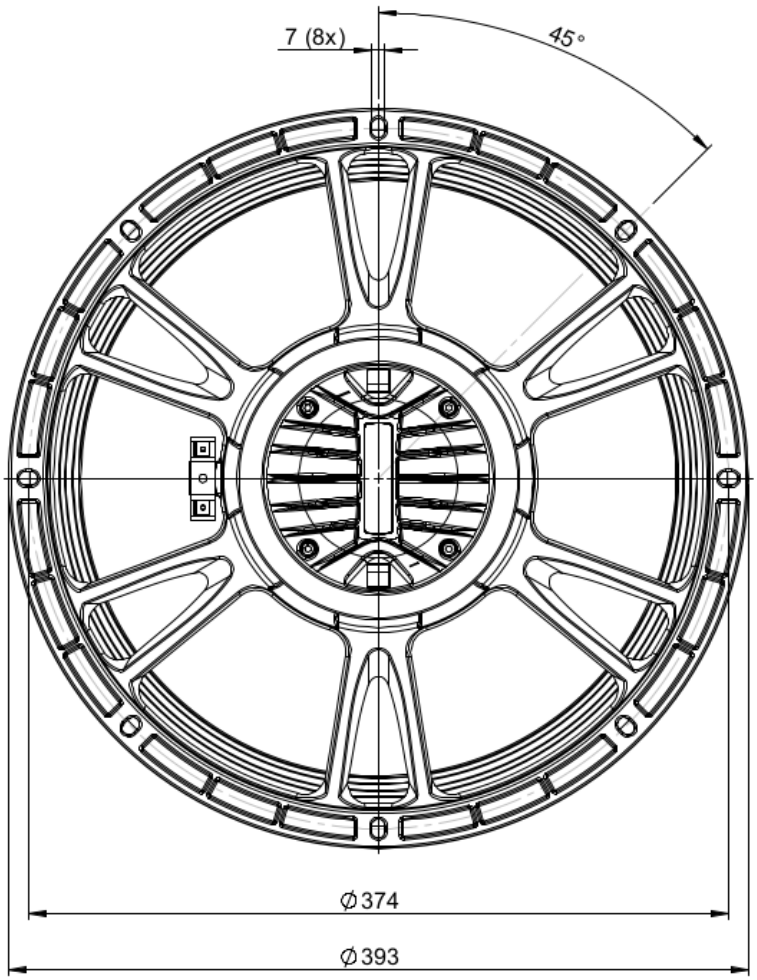

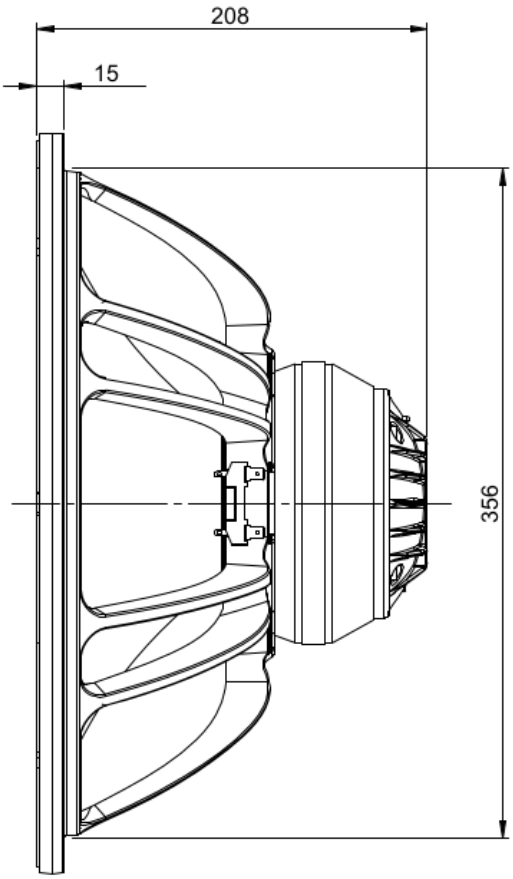

B&C Speakers S.p.A. Via Poggiomoro, 1 - Loc. Vallina, 50012 Bagno a Ripoli (FI) | ITALY
Tel. +39 055 65721 | Fax +39 055 6572312 | mail@bcspeakers.com