5CXN36 8 Ω

- 8 ohm LF unit, 16 ohm HF unit
- 200 W continuous program power capacity
- 70° nominal coverage
- 94 - 18000 Hz response
- 89 dB sensitivity
- Aluminium demodulating ring for very low distortion

Unique to B&C, a complete lineup of high sensitivity and power handling 4”, 5" and 6.5" frame transducers. These high technology products are made with our famously critical quality control, allowing new compact loudspeaker designs with appropriately scaled performance. Combined with a 1.4” dome compression driver, our 5CXN36 coaxial is one of the most compact and cost effective full range transducers that we have ever built, offering 94 - 18000Hz frequency response and a 70° conical coverage pattern.





B&C Speakers S.p.A. Via Poggiomoro, 1 - Loc. Vallina, 50012 Bagno a Ripoli (FI) | ITALY
Tel. +39 055 65721 | Fax +39 055 6572312 | mail@bcspeakers.com

5CXN36 8 Ω

GENERAL

Nominal Diameter	**127 mm (5 in)**
Nominal Impedance	**8 Ω**
Frequency Range	**94 Hz - 18000 Hz**
Dispersion Angle Included by –6 dB down points.	**70 °**

PARAMETERS

Fs	**95 Hz**
Re	**5.8 Ω**
Qes	**0.97**
Qms	**13.5**
Qts	**0.9**
Vas	**4.4 dm³ (0.16 ft³)**
Sd	**95 cm² (14.73 in²)**
η0	**0.36 %**
Xvar	**5.5 mm**
Mms	**8.3 g**
Bl	**5.42 Tm**
Le	**0.89 mH**
EBP	**98 Hz**

SPECIFICATIONS HF UNIT

Nominal Diameter	**127 mm (5 in)**
Nominal Impedance	**16 Ω**
Minimum Impedance	**10 Ω**
Nominal Power Handling 2 hour test made with continuous pink noise signal within the range from the recommended crossover frequency to 20 kHz. Power calculated on rated minimum impedance. Loudspeaker in free air.	**25 W**
Continuous Power Handling Power on Continuous Program is defined as 3 dB greater than the Nominal rating.	**50 W**
Sensitivity Applied RMS Voltage is set to 4V.	**101 dB**
Recommended Crossover 12 dB/oct. or higher slope high-pass filter.	**2 kHz**
Voice Coil Diameter	**36 mm (1.4 in)**
Winding Material	**Aluminium**
Inductance	**0.14 mH**
Flux Density	**1.65 T**
Diaphragm Material	**HT Polymer**

SPECIFICATIONS LF UNIT

Nominal Diameter	**127 mm (5 in)**
Nominal Impedance	**8 Ω**
Minimum Impedance	**6.5 Ω**
Nominal Power Handling 2 hours test made with continuous pink noise signal within the range Fs-10Fs. Power calculated on rated minimum impedance. Loudspeaker in free air.	**100 W**
Continuous Power Handling Power on Continuous Program is defined as 3 dB greater than the Nominal rating.	**200 W**
Sensitivity Applied RMS Voltage is set to 2.83V.	**89 dB**
Voice Coil Diameter	**34 mm (1.3 in)**
Winding Material	**Copper**
Former Material	**Glass Fibre**
Winding Depth	**11 mm (0.43 in)**
Magnetic Gap Depth	**6 mm (0.24 in)**
Flux Density	**0.74 T**
Woofer Cone Treatment	**WP Waterproof Front Side**

DESIGN

Magnet Material	**Neodymium Ring**
Woofer Cone Treatment	**WP Waterproof Front Side**

MOUNTING AND SHIPPING INFO

Overall Diameter	**150 mm (5.91 in)**
Bolt Circle Diameter	**138 mm (5.43 in)**
Baffle Cutout Diameter	**123 mm (4.84 in)**
Depth	**87 mm (3.43 in)**
Flange and Gasket Thickness	**7 mm (0.28 in)**
Net Weight	**0.65 kg (1.43 lb)**
Shipping Units	**1 pcs**
Shipping Weight	**1.13 kg (2.49 lb)**
Shipping Box	**255x255x150 mm (10.04x10.04x5.91 in)**

CROSSOVER

FBCXN36	**8Ω**

SERVICE KITS

HF replacement-diaphragm	**MMDDE11016**
LF recone-kits	**RCK005CXN368**

B&C Speakers S.p.A. Via Poggiomoro, 1 - Loc. Vallina, 50012 Bagno a Ripoli (FI) | ITALY
Tel. +39 055 65721 | Fax +39 055 6572312 | mail@bcspeakers.com

5CXN36 8 Ω

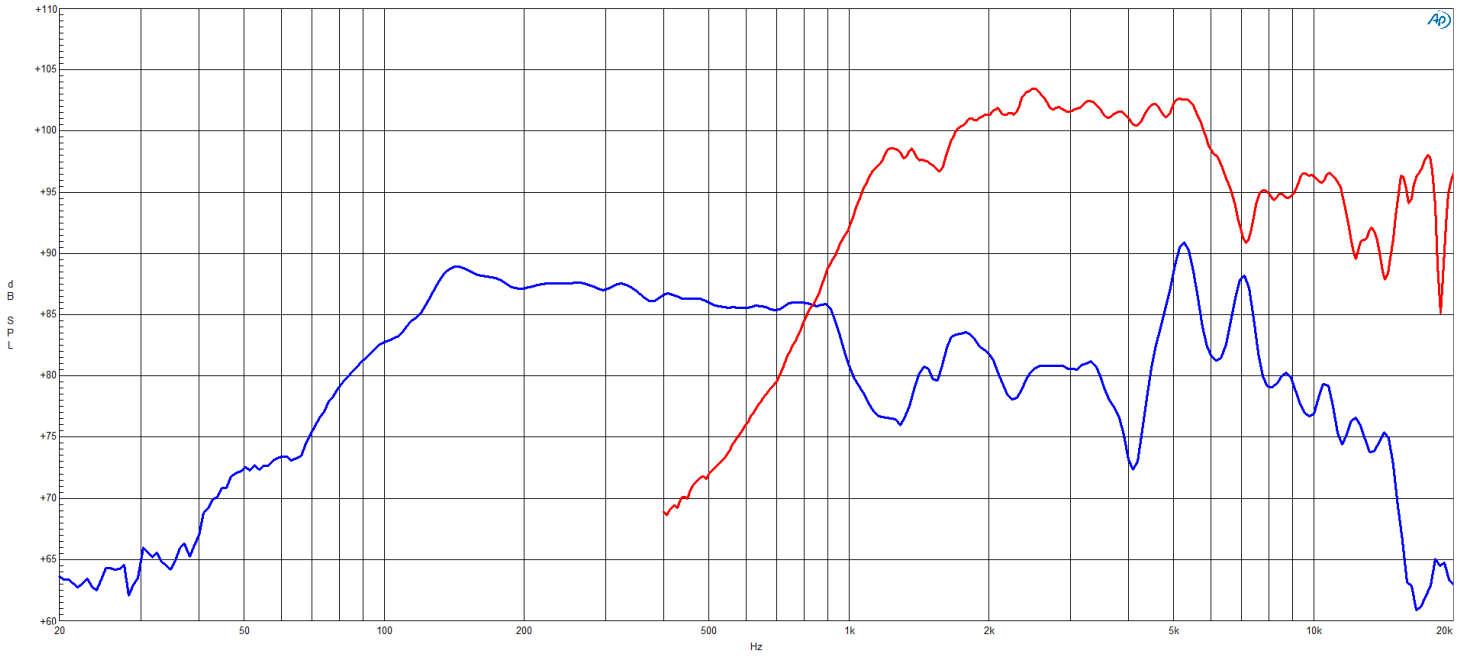
+110
+105
+100
+95
+90
+85
+80
+75
+70
+65
+60
dB SPL
20
50
100
200
500
1k
2k
5k
10k
20k
Hz

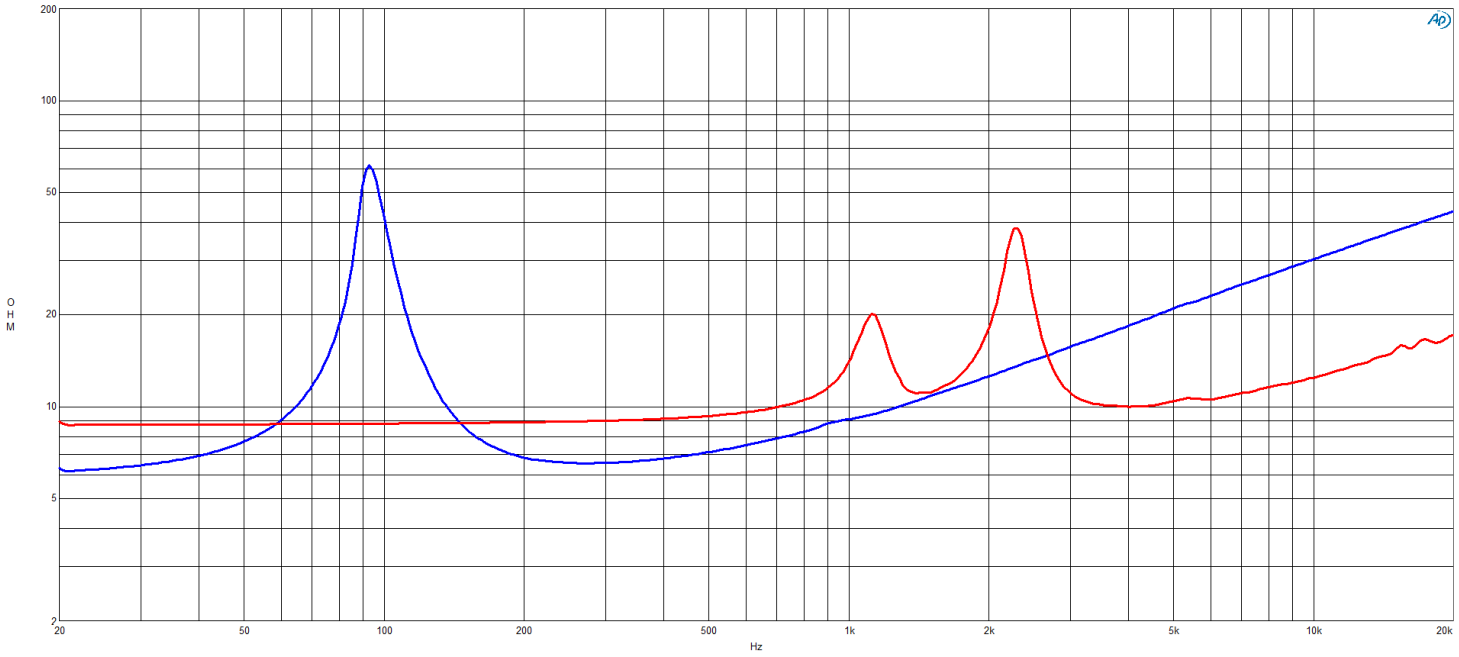
200
100
50
20
10
5
2
OHM
20
50
100
200
500
1k
2k
5k
10k
20k
Hz

5CXN36 8 Ω

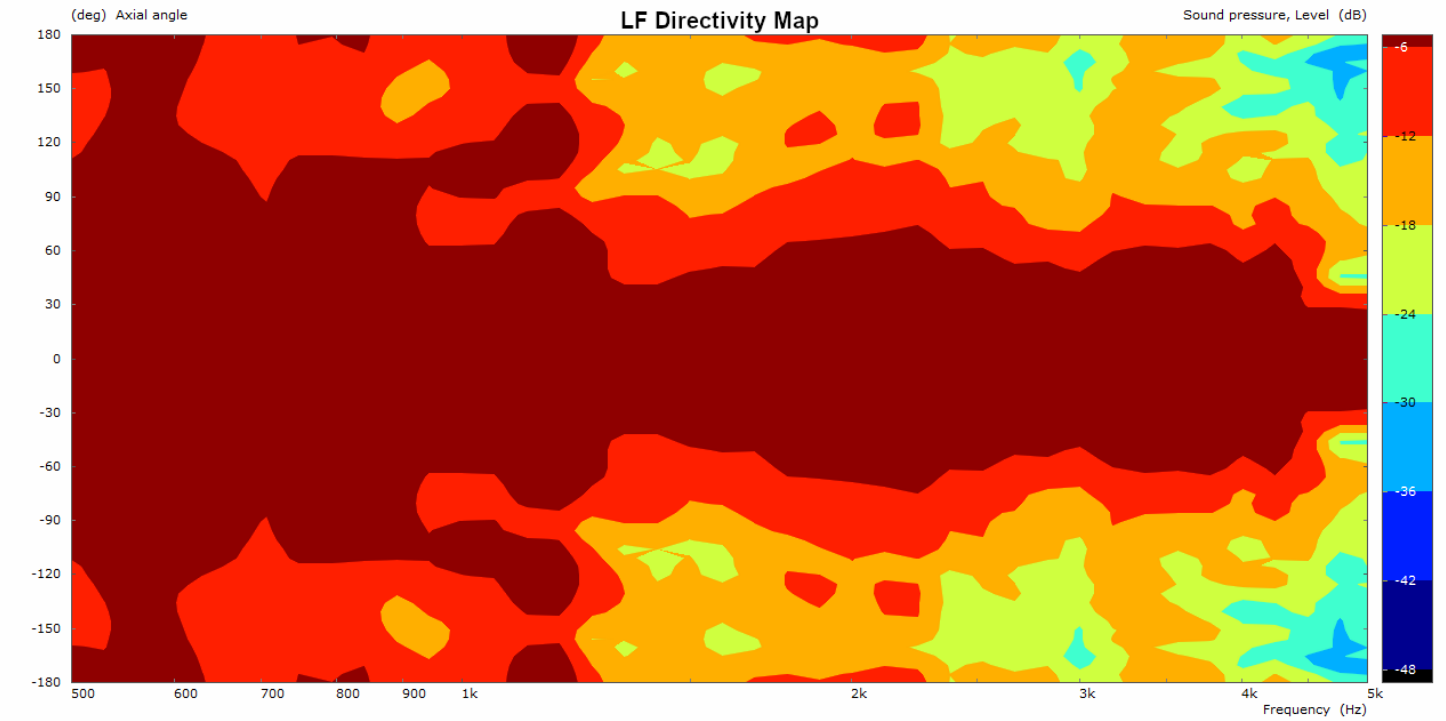

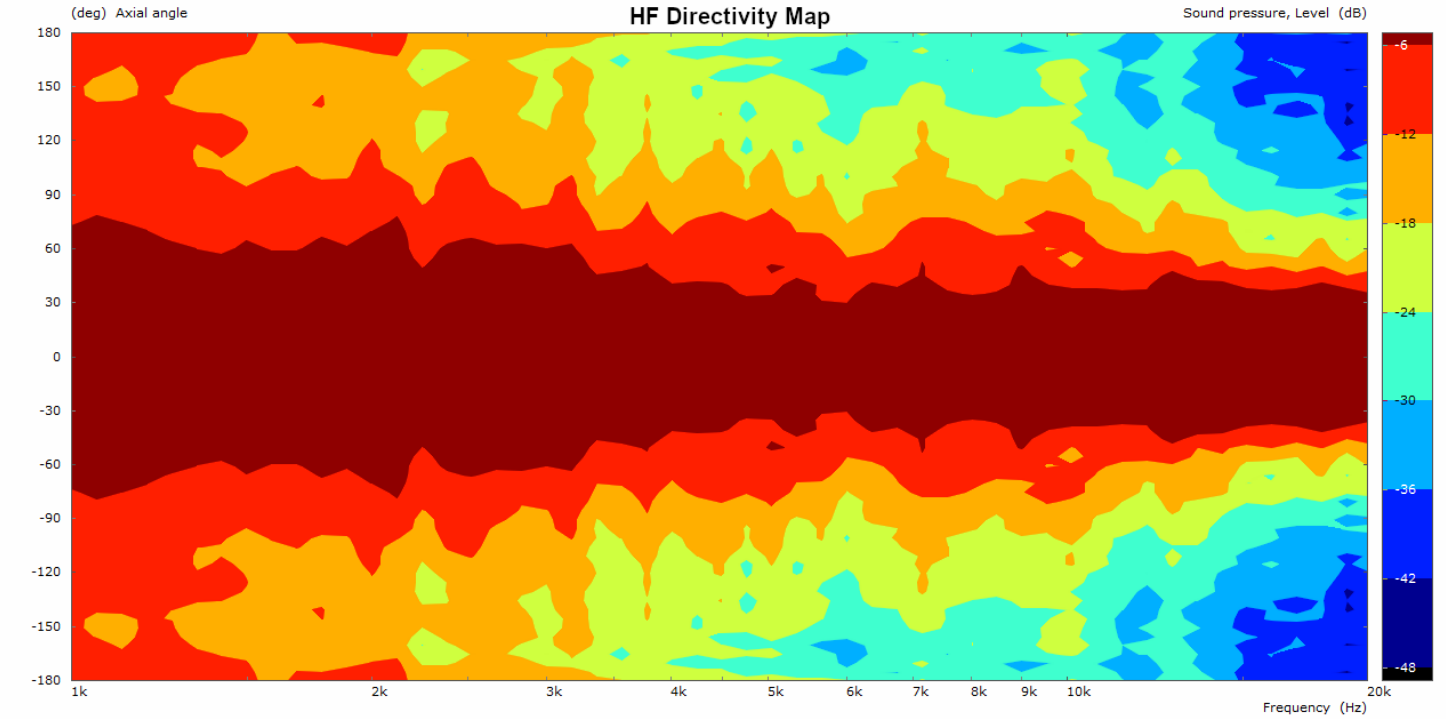

B&C Speakers S.p.A. Via Poggiomoro, 1 - Loc. Vallina, 50012 Bagno a Ripoli (FI) | ITALY
Tel. +39 055 65721 | Fax +39 055 6572312 | mail@bcspeakers.com

5CXN36 8 Ω

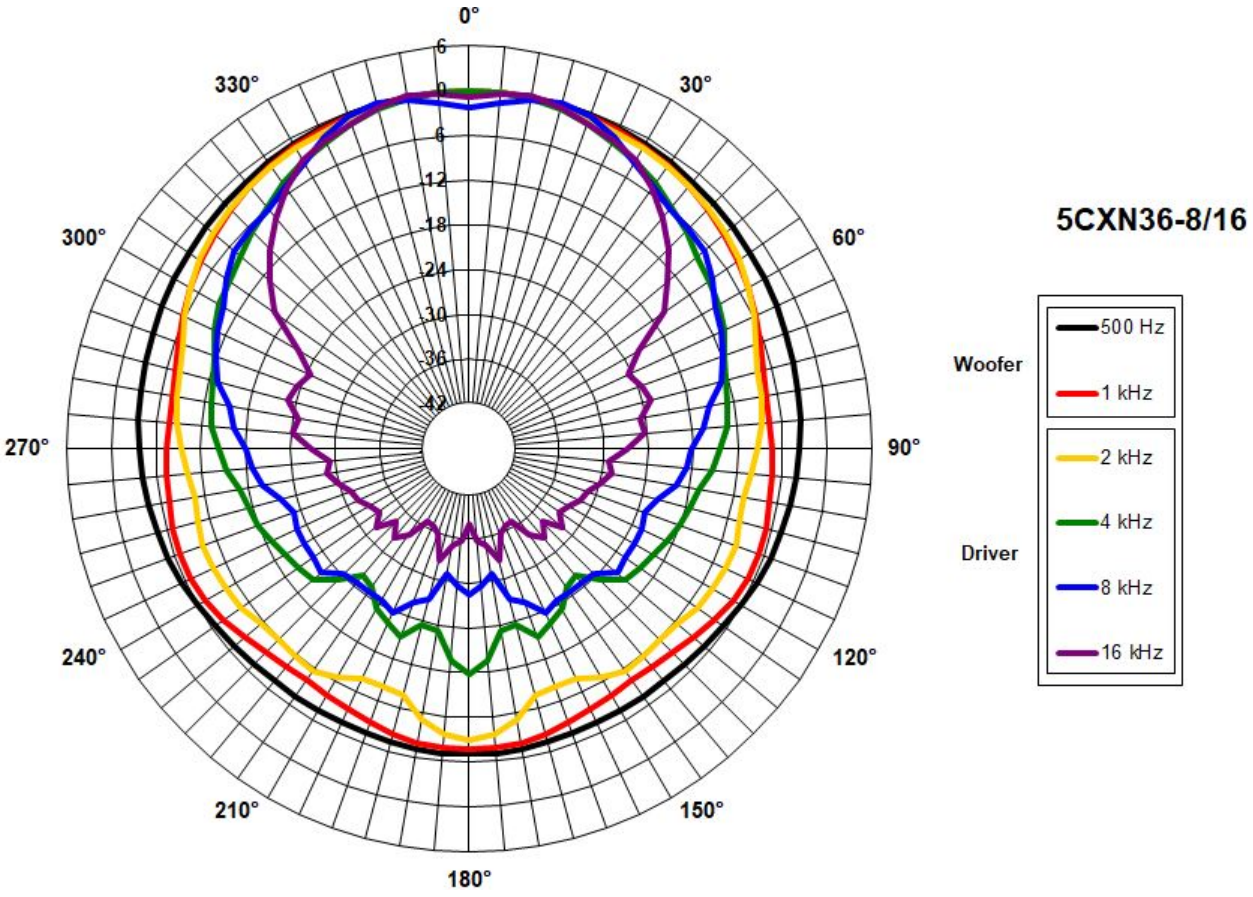
0°
30°
60°
90°
120°
150°
180°
210°
240°
270°
300°
330°
6
0
6
12
18
24
30
36
42
5CXN36-8/16
Woofer
Driver
500 Hz
1 kHz
2 kHz
4 kHz
8 kHz
16 kHz

5CXN36 8 Ω

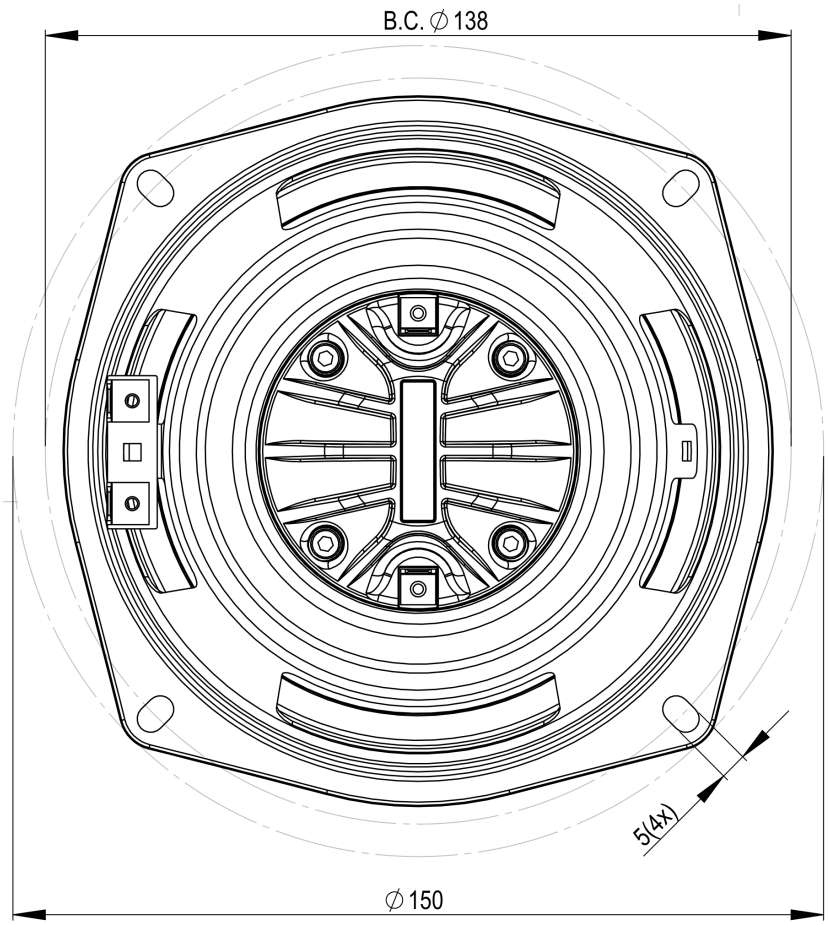

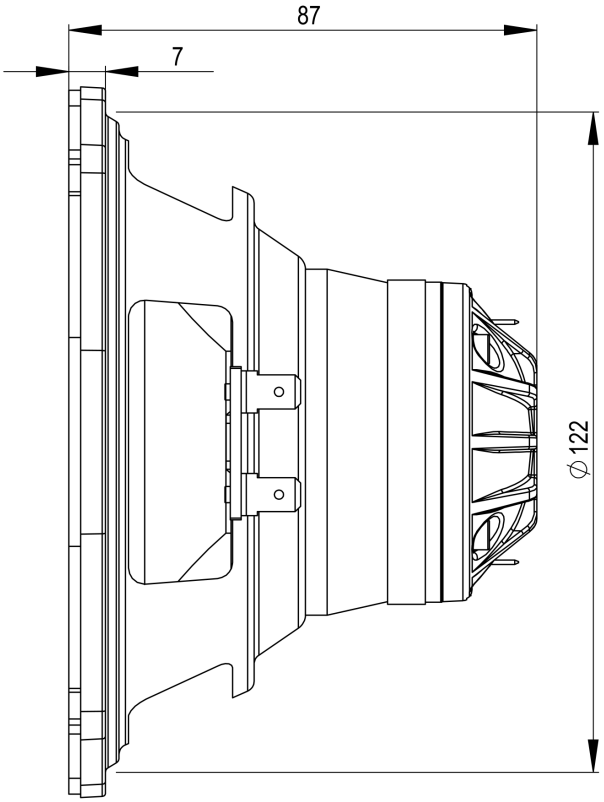

B&C Speakers S.p.A. Via Poggiomoro, 1 - Loc. Vallina, 50012 Bagno a Ripoli (FI) | ITALY
Tel. +39 055 65721 | Fax +39 055 6572312 | mail@bcspeakers.com