6FHX51 8 Ω

- 300 W continuous program power capacity
- 70° nominal coverage
- 85 - 18000 Hz response
- 93 dB sensitivity
- 20.1 mm (0.79”) HF unit exit diameter





B&C Speakers S.p.A. Via Poggiomoro, 1 - Loc. Vallina, 50012 Bagno a Ripoli (FI) | ITALY
Tel. +39 055 65721 | Fax +39 055 6572312 | mail@bcspeakers.com

6FHX51 8 Ω

GENERAL

Nominal Diameter	**170 mm (6.5 in)**
Nominal Impedance	**8 Ω**
Frequency Range	**85 Hz - 18000 Hz**
Dispersion Angle Included by –6 dB down points.	**70 °**

PARAMETERS

Fs	**85 Hz**
Re	**5.5 Ω**
Qes	**0.4**
Qms	**7.8**
Qts	**0.37**
Vas	**5 dm³ (0.18 ft³)**
Sd	**132 cm² (20.5 in²)**
η0	**0.83 %**
Xvar	**5.7 mm**
Mms	**16 g**
Bl	**11.3 Tm**
Le	**1 mH**
EBP	**213 Hz**

SPECIFICATIONS HF UNIT

Nominal Diameter	**170 mm (6.5 in)**
Nominal Impedance	**8 Ω**
Minimum Impedance	**7 Ω**
Nominal Power Handling 2 hour test made with continuous pink noise signal within the range from the recommended crossover frequency to 20 kHz. Power calculated on rated minimum impedance. Loudspeaker in free air.	**10 W**
Continuous Power Handling Power on Continuous Program is defined as 3 dB greater than the Nominal rating.	**20 W**
Sensitivity Applied RMS Voltage is set to 2.83V.	**108.5 dB**
Recommended Crossover 12 dB/oct. or higher slope high-pass filter.	**2.5 kHz**
Voice Coil Diameter	**25 mm (1 in)**
Winding Material	**Aluminium**
Inductance	**0.1 mH**
Flux Density	**1.65 T**
Diaphragm Material	**Polyester**

SPECIFICATIONS LF UNIT

Nominal Diameter	**170 mm (6.5 in)**
Nominal Impedance	**8 Ω**
Minimum Impedance	**6.5 Ω**
Nominal Power Handling 2 hours test made with continuous pink noise signal within the range Fs-10Fs. Power calculated on rated minimum impedance. Loudspeaker in free air.	**150 W**
Continuous Power Handling Power on Continuous Program is defined as 3 dB greater than the Nominal rating.	**300 W**
Sensitivity Applied RMS Voltage is set to 2.83V.	**93 dB**
Voice Coil Diameter	**51 mm (2 in)**
Winding Material	**Copper**
Former Material	**Kapton**
Winding Depth	**13 mm (0.51 in)**
Magnetic Gap Depth	**6 mm (0.24 in)**
Flux Density	**1.05 T**
Woofer Cone Treatment	**WP Waterproof Front Side**

DESIGN

Magnet Material	**Ferrite (LF) - Neodym. Ring (HF)**
Woofer Cone Treatment	**WP Waterproof Front Side**

MOUNTING AND SHIPPING INFO

Overall Diameter	**187 mm (7.4 in)**
Bolt Circle Diameter	**172 mm (6.7 in)**
Baffle Cutout Diameter	**146 mm (5.75 in)**
Depth	**122 mm (4.8 in)**
Flange and Gasket Thickness	**12 mm (0.47 in)**
Net Weight	**2.6 kg (5.73 lb)**
Shipping Units	**1 pcs**
Shipping Weight	**3.05 kg (6.72 lb)**
Shipping Box	**255x255x150 mm (10.04x10.04x5.91 in)**

SERVICE KITS

HF replacement-diaphragm	**MMDDE58**
LF recone-kits	**RCK06FHX518**

B&C Speakers S.p.A. Via Poggiomoro, 1 - Loc. Vallina, 50012 Bagno a Ripoli (FI) | ITALY
Tel. +39 055 65721 | Fax +39 055 6572312 | mail@bcspeakers.com

6FHX51 8 Ω

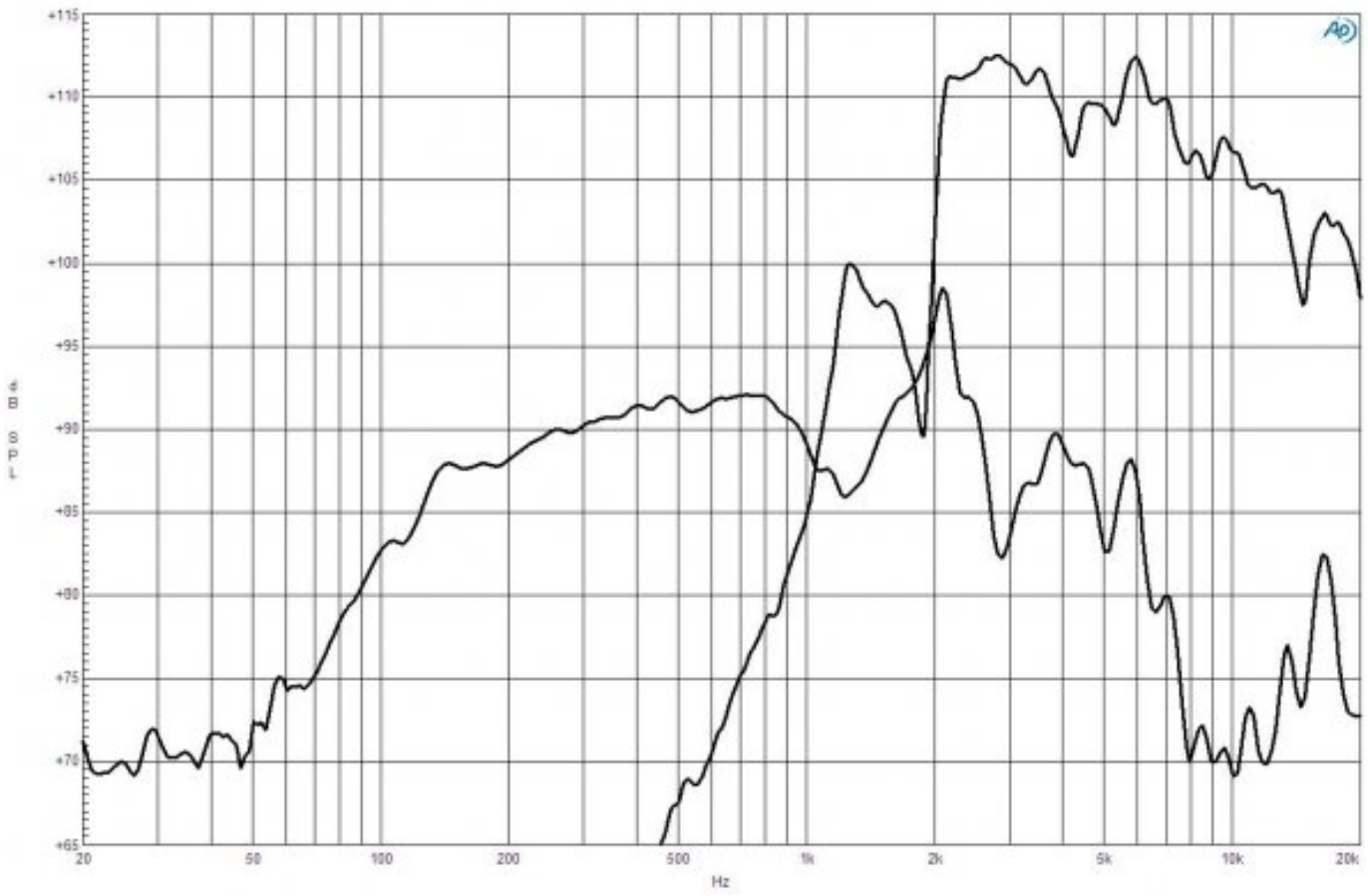

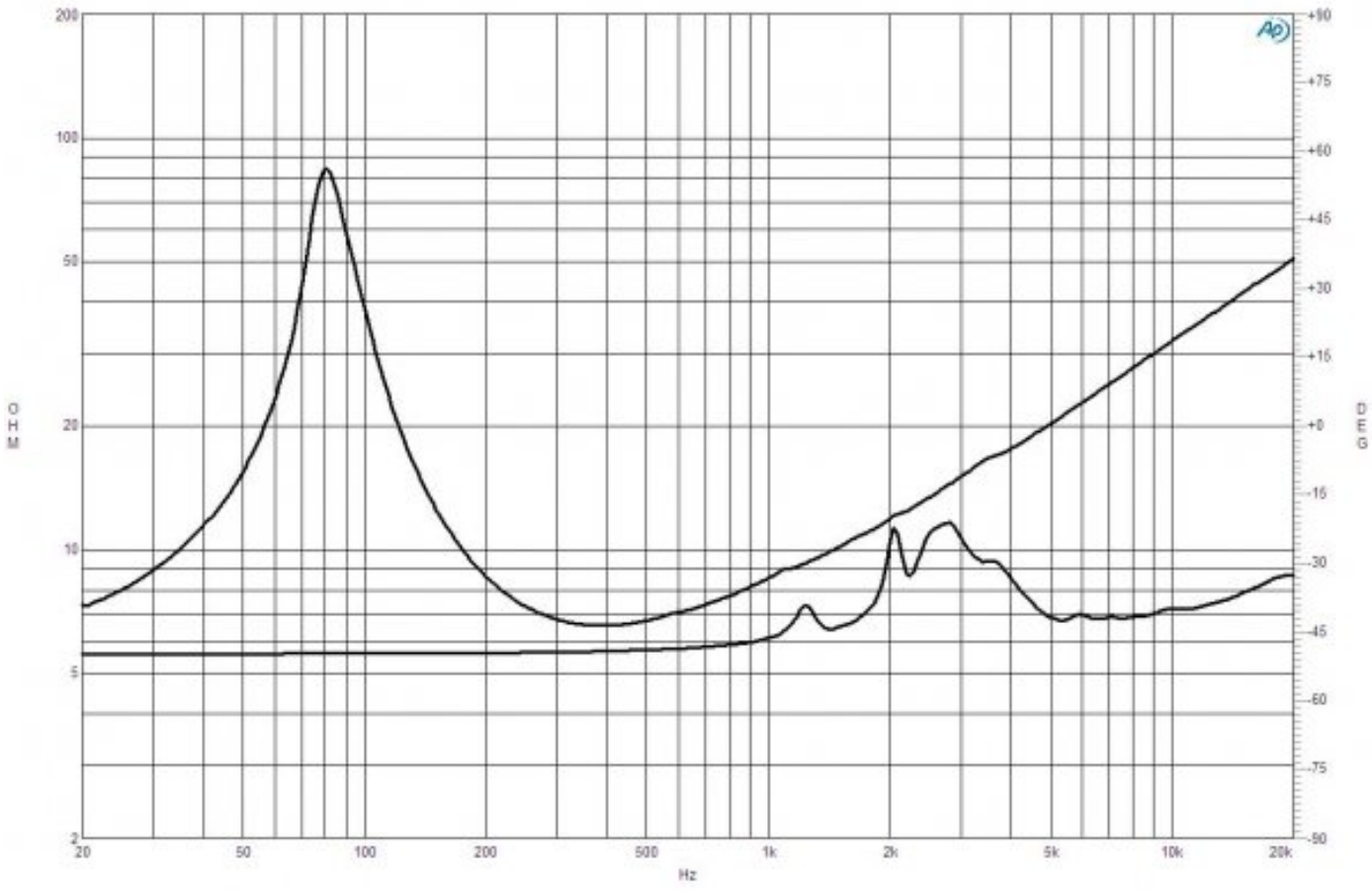

B&C Speakers S.p.A. Via Poggiomoro, 1 - Loc. Vallina, 50012 Bagno a Ripoli (FI) | ITALY
Tel. +39 055 65721 | Fax +39 055 6572312 | mail@bcspeakers.com

6FHX51 8 Ω

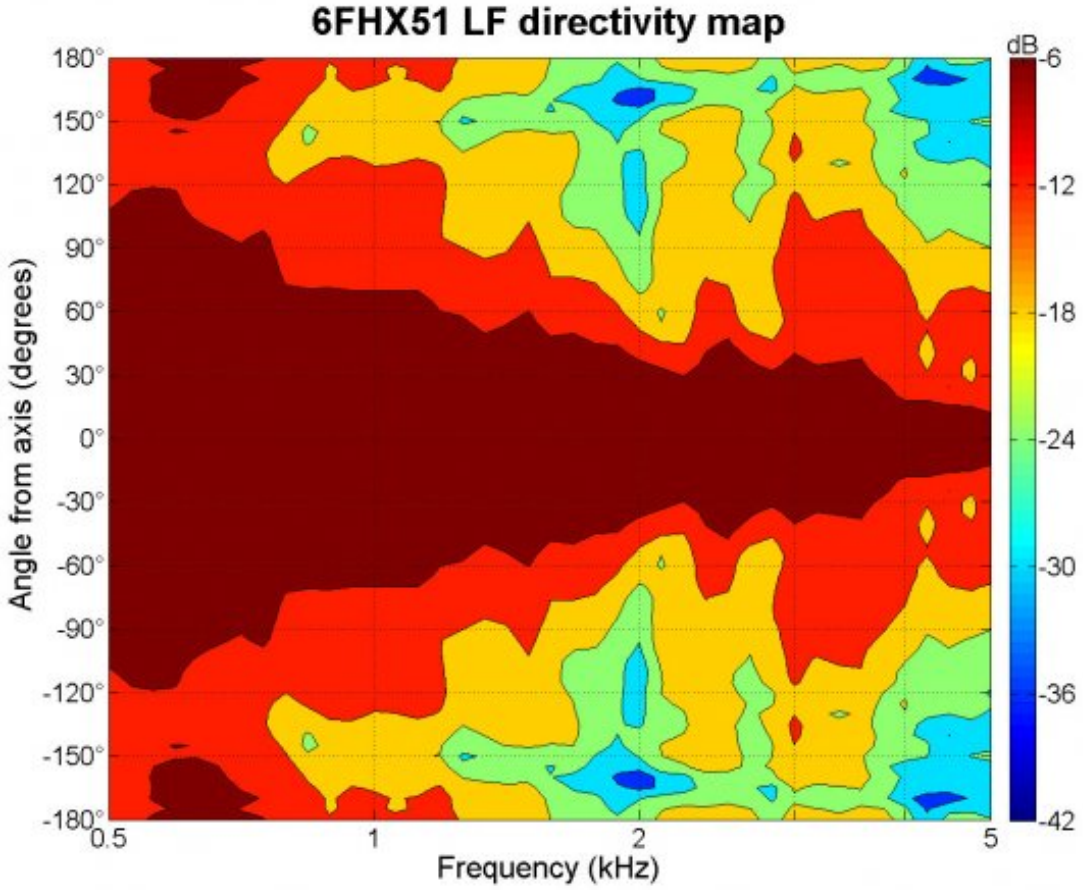

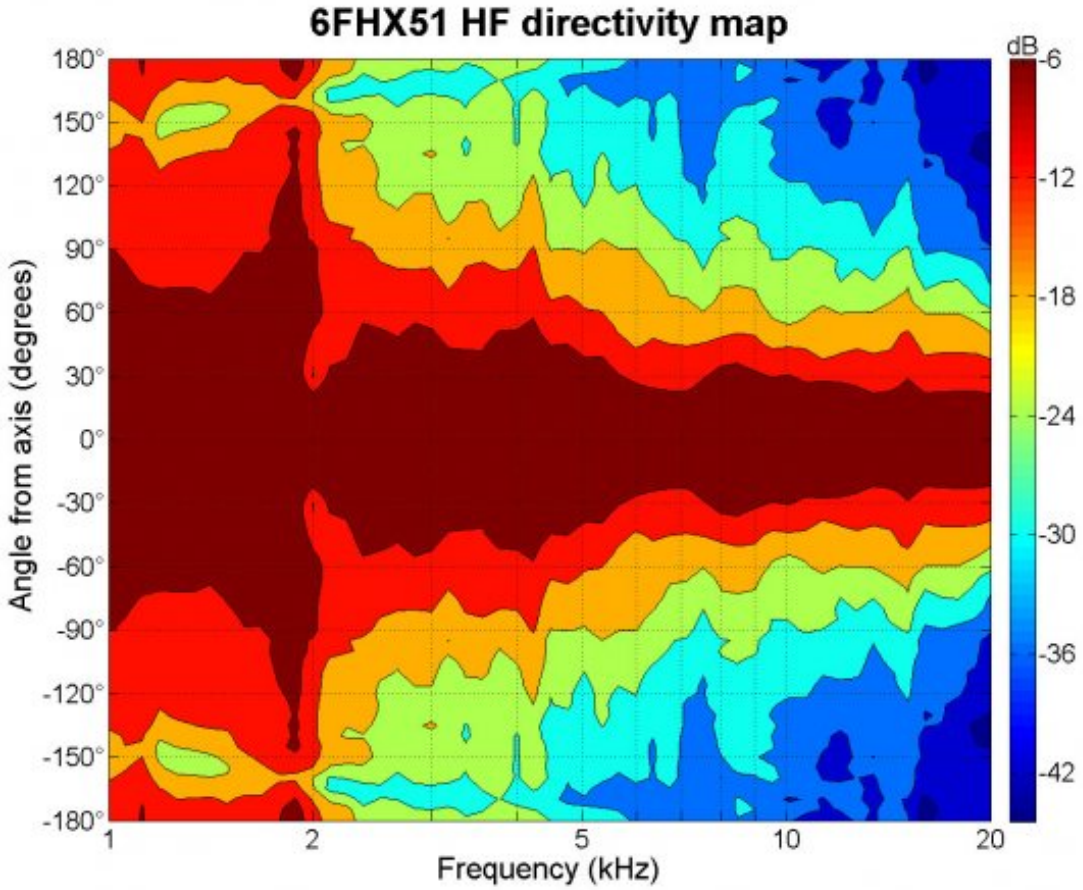

B&C Speakers S.p.A. Via Poggiomoro, 1 - Loc. Vallina, 50012 Bagno a Ripoli (FI) | ITALY
Tel. +39 055 65721 | Fax +39 055 6572312 | mail@bcspeakers.com

6FHX51 8 Ω

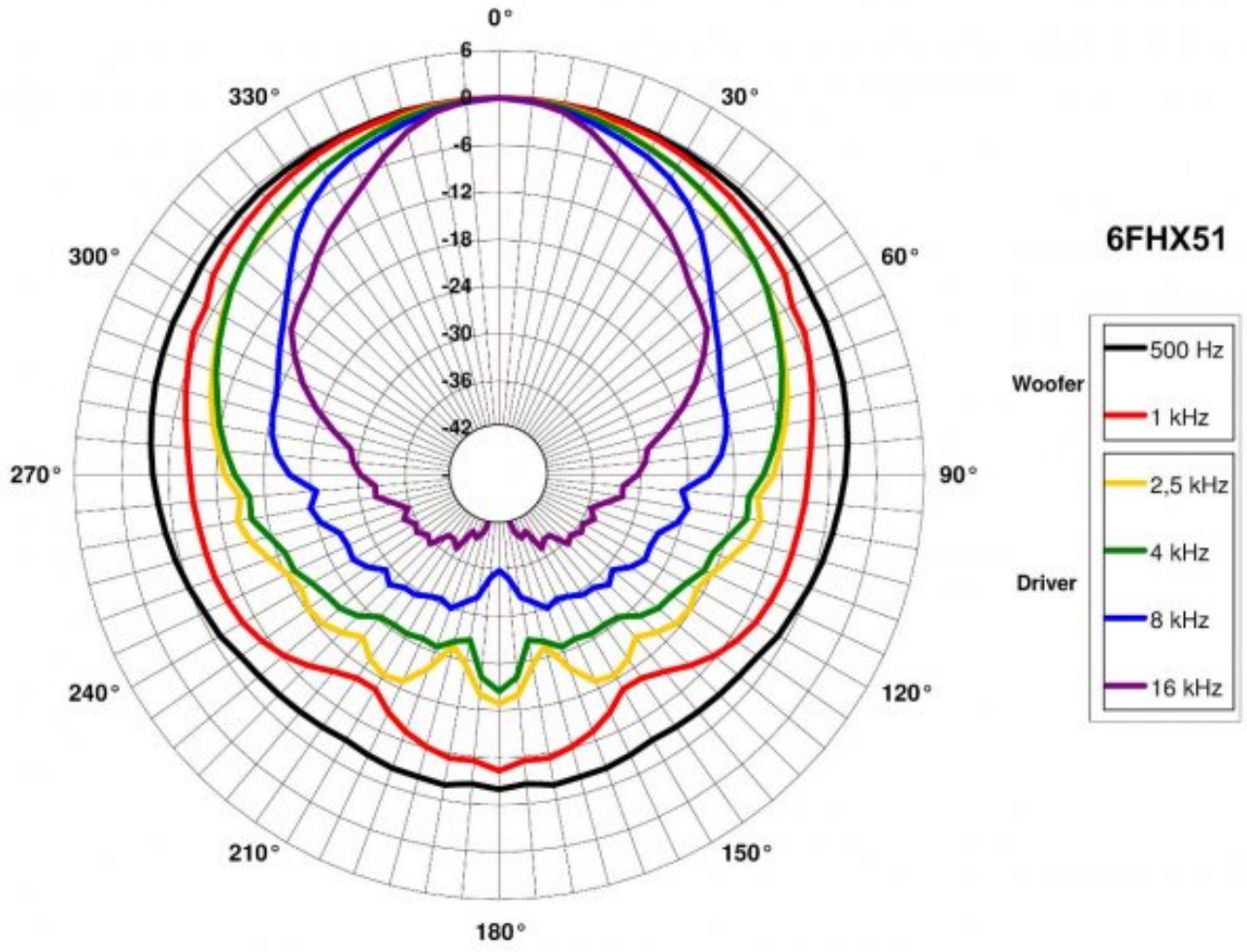

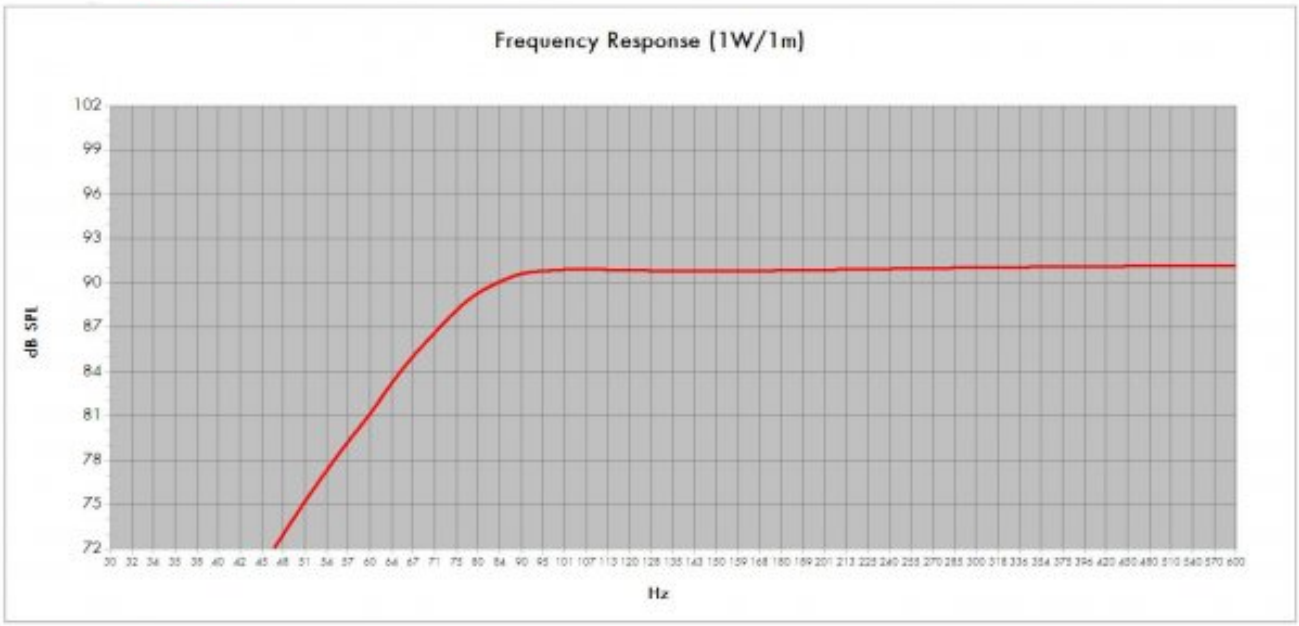

Model:	6FHX51		
Enclosure Type:	Bass Reflex	Configuration:	One Driver
Internal Net Volume (Litres):	7	QB:	6
Tuning Frequency (Hz):	80	Port Area (cm²):	30,4
Frequency (-3 dB) (Hz):	75,4	Port Length (cm):	15,0

B&C Speakers S.p.A. Via Poggiomoro, 1 - Loc. Vallina, 50012 Bagno a Ripoli (FI) | ITALY
Tel. +39 055 65721 | Fax +39 055 6572312 | mail@bcspeakers.com

6FHX51 8 Ω

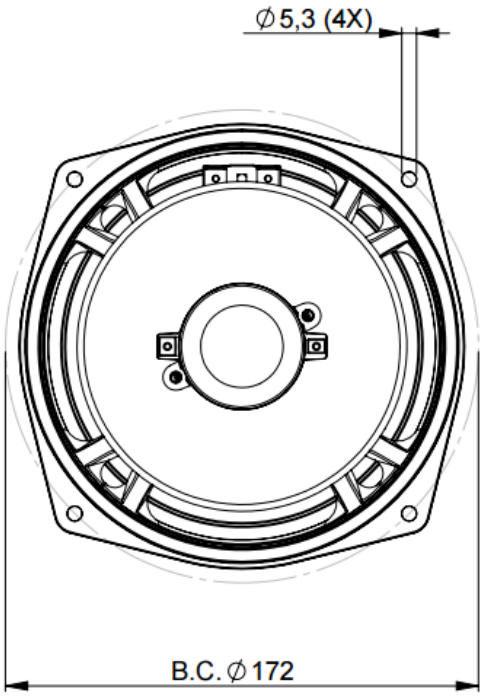

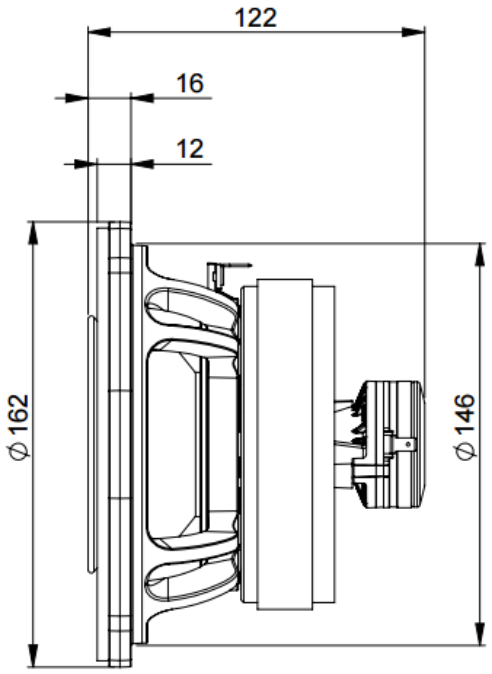

B&C Speakers S.p.A. Via Poggiomoro, 1 - Loc. Vallina, 50012 Bagno a Ripoli (FI) | ITALY
Tel. +39 055 65721 | Fax +39 055 6572312 | mail@bcspeakers.com