DE910TN 8 Ω

SPECIFICATIONS

Driver mounted on B&C ME90 horn.

Throat Diameter	**33 mm (1.3 in)**
Nominal Impedance	**8 Ω**
Minimum Impedance	**7.8 Ω**
Nominal Power Handling 2 hour test made with continuous pink noise signal within the range from the recommended crossover frequency to 20 kHz. Power calculated on rated minimum impedance.	**110 W**
Continuous Power Handling Power on Continuous Program is defined as 3 dB greater than the Nominal rating.	**220 W**
Sensitivity Applied RMS Voltage is set to 2.83 V for 8 ohms Nominal Impedance.	**108.5 dB**
Frequency Range	**0.5 kHz - 18 kHz**
Recommended Crossover 12 dB/oct. or higher slope high-pass filter.	**1.2 kHz**
Voice Coil Diameter	**75 mm (3 in)**
Winding Material	**Aluminium**
Inductance	**0.14 mH**
Flux Density	**2.05 T**
Diaphragm Material	**Titanium**

MOUNTING AND SHIPPING INFO

Four M6 holes 90° on 102 mm (4 in) diameter

Overall Diameter	**131 mm (5.2 in)**
Depth	**52 mm (2.05 in)**
Net Weight	**2.4 kg (5.29 lb)**
Shipping Units	**1 pcs**
Shipping Weight	**2.45 kg (5.39 lb)**
Shipping Box	**140x135x62 mm (5.51x5.31x2.44 in)**

SERVICE KITS

HF replacement-diaphragm	**MMD3BTN8M**

- 220 W continuous program power capacity
- 1.3" horn throat diameter
- 75 mm (3 in) aluminium voice coil
- Titanium diaphragm
- 500 - 18000 Hz response
- 108.5 dB sensitivity
- Neodymium magnet assembly with shorting copper cap



B&C Speakers S.p.A. Via Poggiomoro, 1 - Loc. Vallina, 50012 Bagno a Ripoli (FI) | ITALY
Tel. +39 055 65721 | Fax +39 055 6572312 | mail@bcspeakers.com

DE910TN 8 Ω

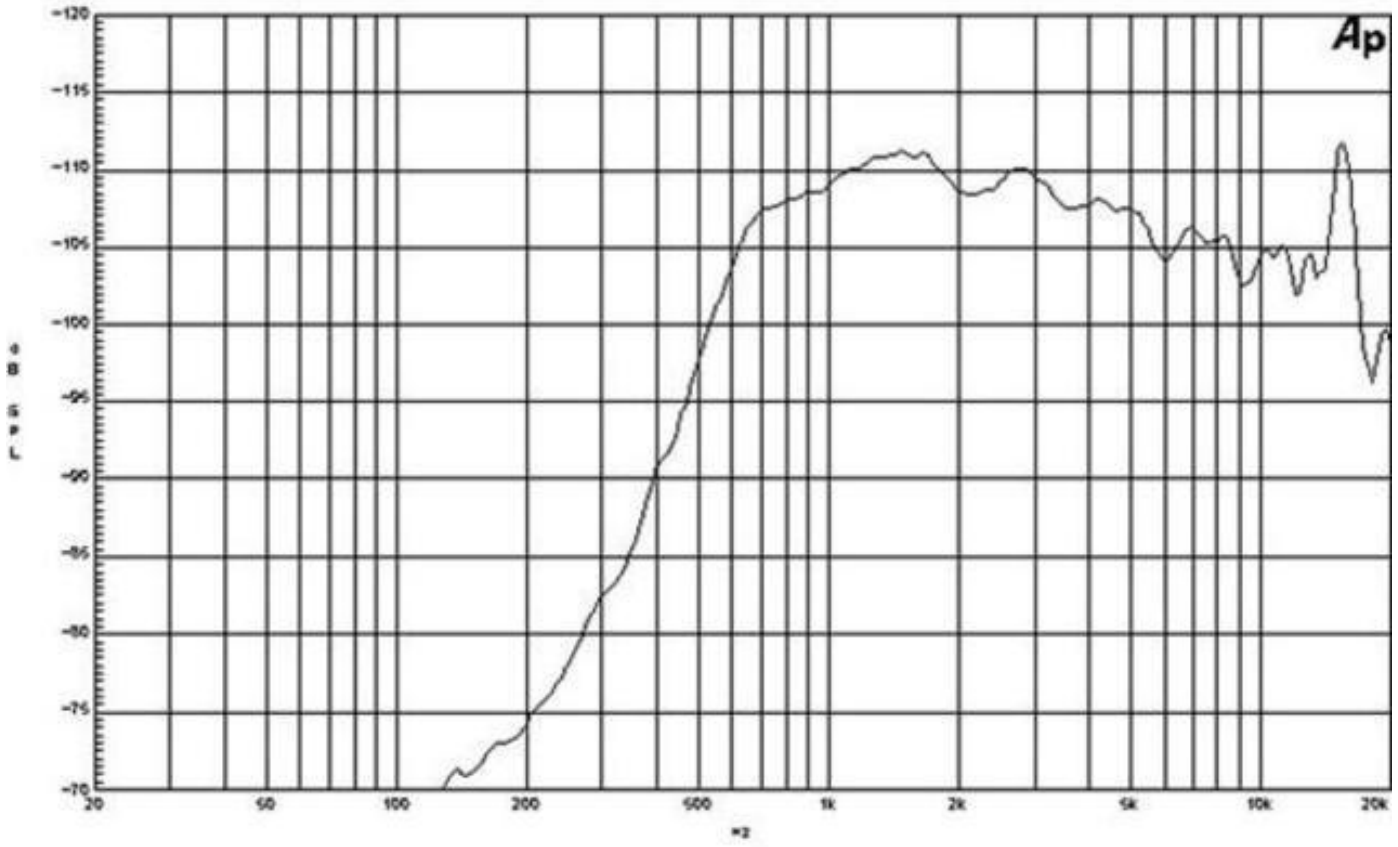

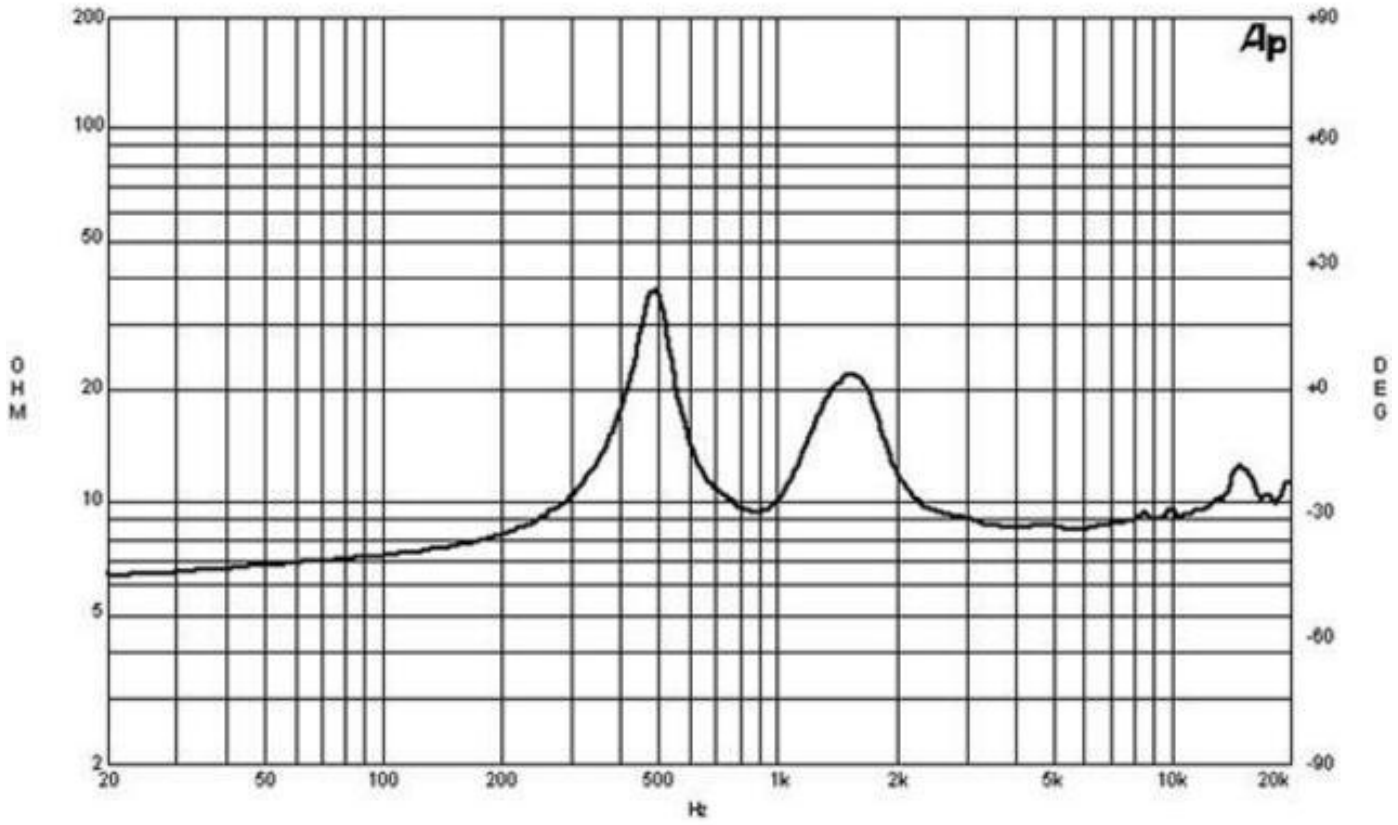

B&C Speakers S.p.A. Via Poggiomoro, 1 - Loc. Vallina, 50012 Bagno a Ripoli (FI) | ITALY
Tel. +39 055 65721 | Fax +39 055 6572312 | mail@bcspeakers.com

DE910TN 8 Ω

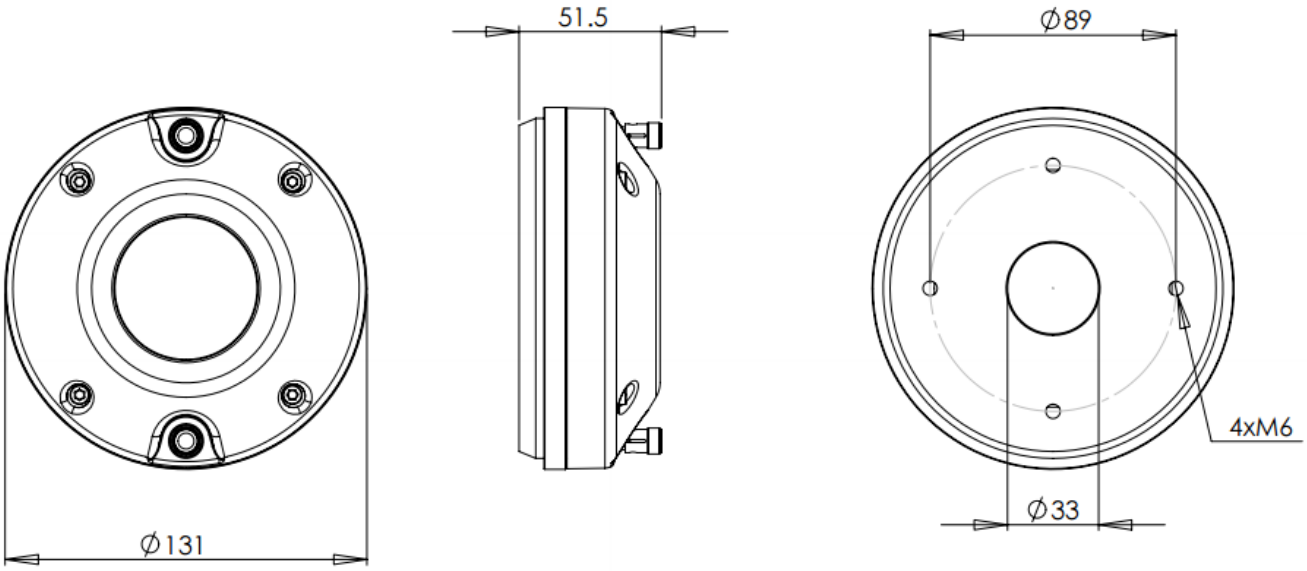

B&C Speakers S.p.A. Via Poggiomoro, 1 - Loc. Vallina, 50012 Bagno a Ripoli (FI) | ITALY
Tel. +39 055 65721 | Fax +39 055 6572312 | mail@bcspeakers.com