DE610 8 Ω

SPECIFICATIONS

Driver mounted on B&C ME 90 horn.

Throat Diameter	**36 mm (1.4 in)**
Nominal Impedance	**8 Ω**
Minimum Impedance	**7.6 Ω**
Nominal Power Handling 2 hour test made with continuous pink noise signal within the range from the recommended crossover frequency to 20 kHz. Power calculated on rated minimum impedance.	**80 W**
Continuous Power Handling Power on Continuous Program is defined as 3 dB greater than the Nominal rating.	**160 W**
Sensitivity Applied RMS Voltage is set to 2.83 V for 8 ohms Nominal Impedance.	**108 dB**
Frequency Range	**1 kHz - 18 kHz**
Recommended Crossover 12 dB/oct. or higher slope high-pass filter.	**1.2 kHz**
Voice Coil Diameter	**65 mm (2.5 in)**
Winding Material	**Aluminium**
Inductance	**0.15 mH**
Flux Density	**1.75 T**
Diaphragm Material	**Titanium**

MOUNTING AND SHIPPING INFO

Four M6 holes 90° on 102 mm (4 in) diameter

Overall Diameter	**156 mm (6.1 in)**
Depth	**65 mm (2.5 in)**
Net Weight	**3.8 kg (8.4 lb)**
Shipping Units	**1 pcs**
Shipping Weight	**3.92 kg (8.64 lb)**
Shipping Box	**190x190x80 mm (7.48x7.48x3.15 in)**

SERVICE KITS

HF replacement-diaphragm	**MMD6108**

- 160 W continuous program power capacity
- 1.4' horn throat diameter
- 65 mm (2.5 in) aluminium voice coil
- Titanium diaphragm
- 1000 - 18000 Hz response
- 108 dB sensitivity
- Shorting copper cap for extended HF response



B&C Speakers S.p.A. Via Poggiomoro, 1 - Loc. Vallina, 50012 Bagno a Ripoli (FI) | ITALY
Tel. +39 055 65721 | Fax +39 055 6572312 | mail@bcspeakers.com

DE610 8 Ω

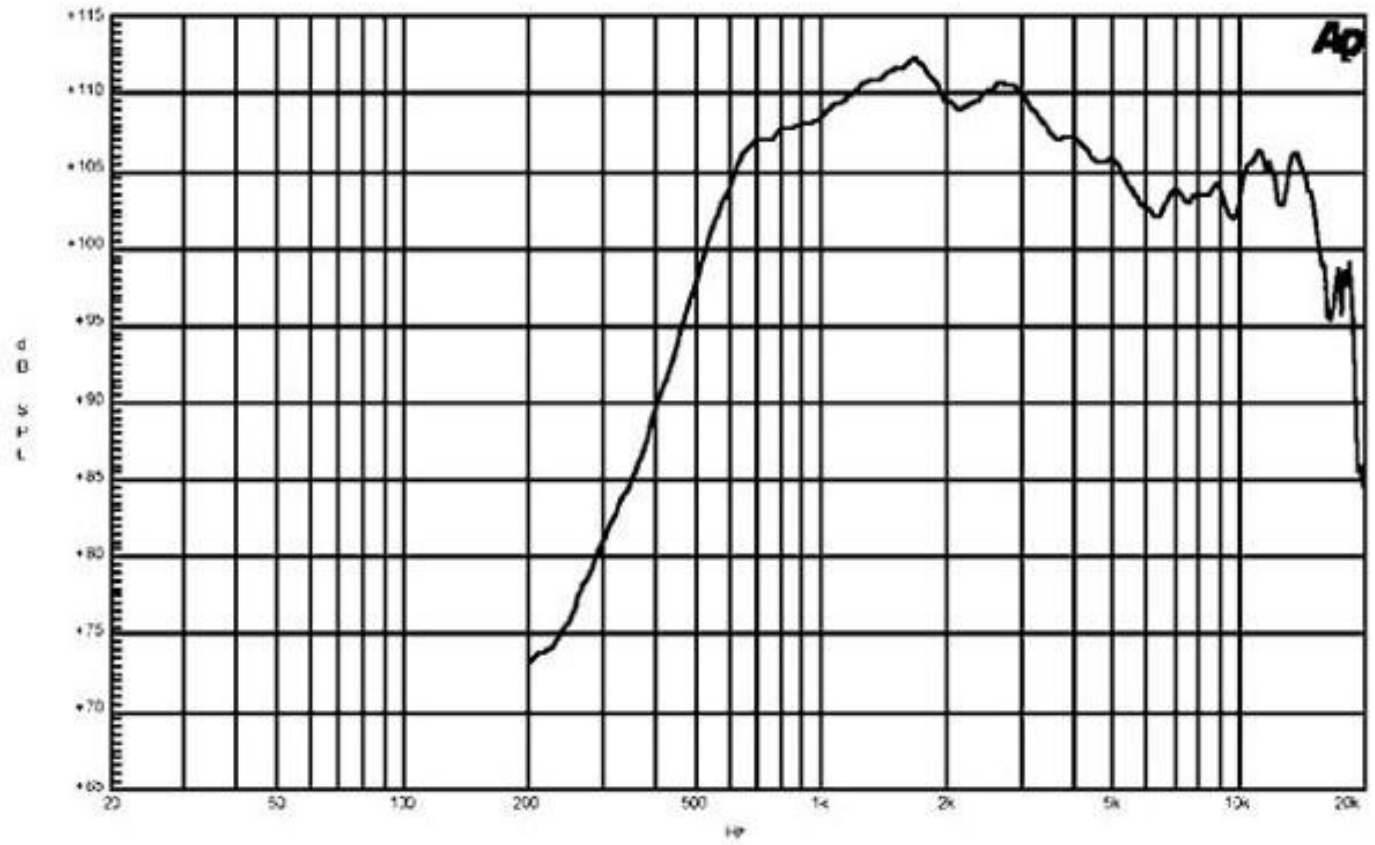
dB SPL
+115
+110
+105
+100
+95
+90
+85
+80
+75
+70
+65
20
50
100
200
500
1k
2k
5k
10k
20k
Hz

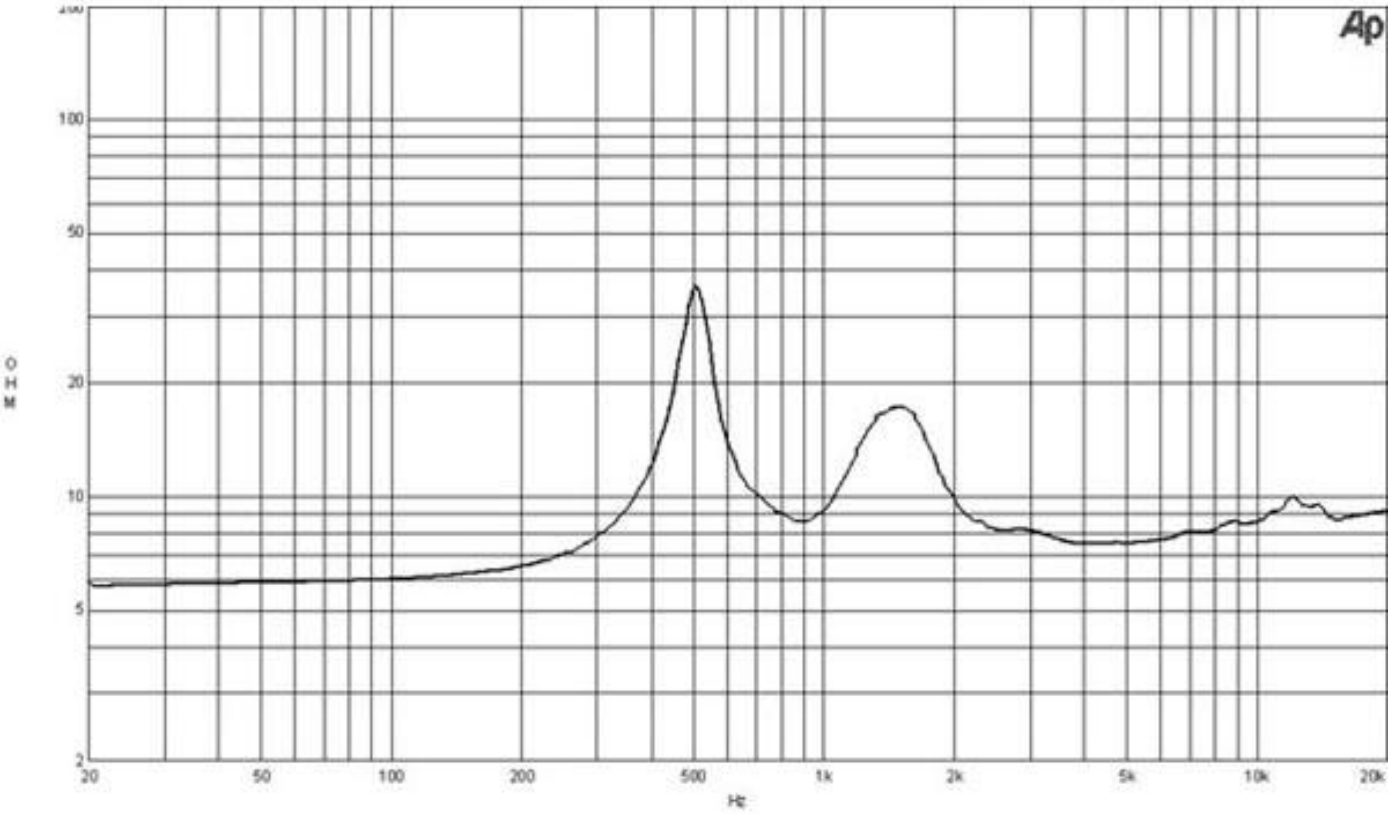
OHM
100
50
20
10
5
2
20
50
100
200
500
1k
2k
5k
10k
20k
Hz

DE610 8 Ω

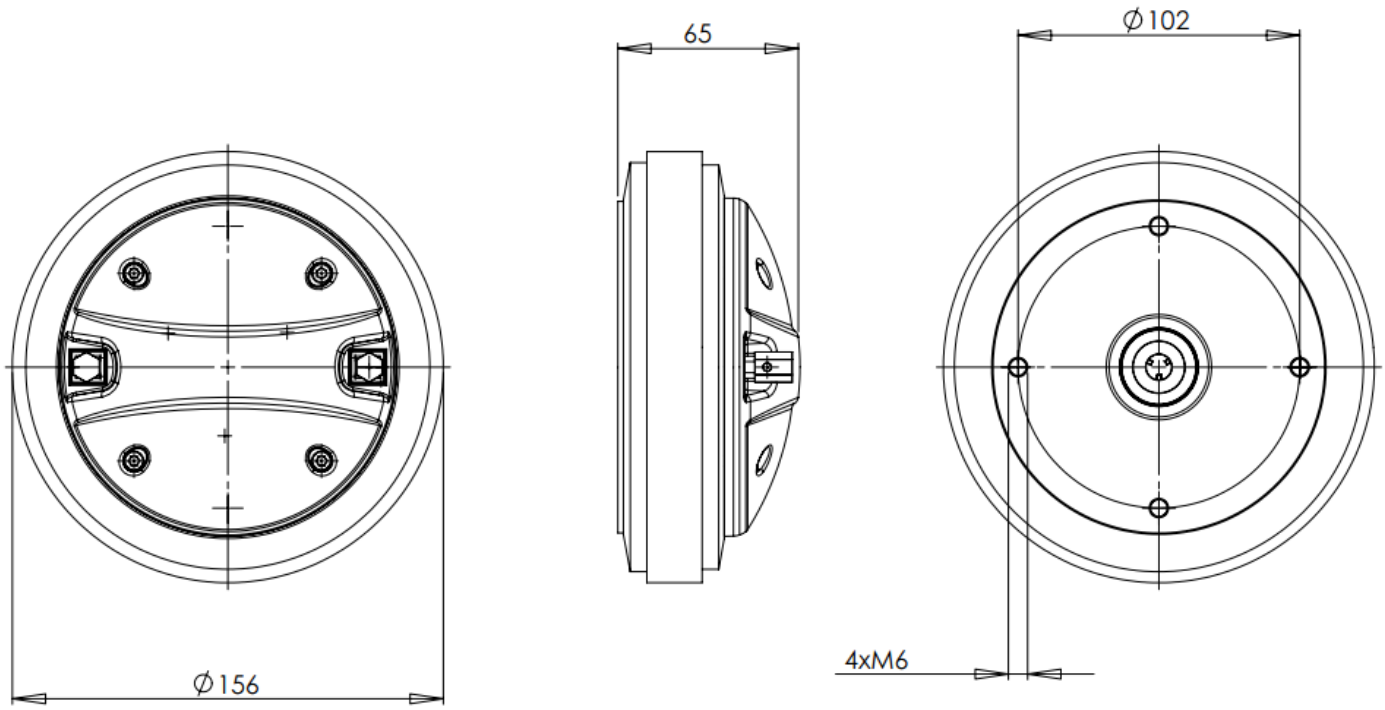

B&C Speakers S.p.A. Via Poggiomoro, 1 - Loc. Vallina, 50012 Bagno a Ripoli (FI) | ITALY
Tel. +39 055 65721 | Fax +39 055 6572312 | mail@bcspeakers.com