DE640U 8 Ω

SPECIFICATIONS

Driver mounted on B&C ME90 horn

Throat Diameter	**36 mm (1.4 in)**
Nominal Impedance	**8 Ω**
Minimum Impedance	**7.6 Ω**
Nominal Power Handling 2 hour test made with continuous pink noise signal within the range from the recommended crossover frequency to 20 kHz. Power calculated on rated minimum impedance.	**70 W**
Continuous Power Handling Power on Continuous Program is defined as 3 dB greater than the Nominal rating.	**140 W**
Sensitivity Applied RMS Voltage is set to 2.83 V for 8 ohms Nominal Impedance.	**109 dB**
Frequency Range	**1 kHz - 18 kHz**
Recommended Crossover 12 dB/oct. or higher slope high-pass filter.	**1.2 kHz**
Voice Coil Diameter	**65 mm (2.5 in)**
Winding Material	**Aluminium**
Inductance	**0.14 mH**
Flux Density	**1.95 T**
Diaphragm Material	**Polyimide**

MOUNTING AND SHIPPING INFO

Four M6 holes 90° on 76 mm (3 in) diameter

Overall Diameter	**110 mm (4.33 in)**
Depth	**51 mm (2.01 in)**
Net Weight	**1.4 kg (3.09 lb)**



- 140 W continuous program power capacity
- 1.4" horn throat diameter
- 65 mm (2.5 in) aluminium voice coil
- Polyimide diaphragm
- 1000 - 18000 Hz response
- 109 dB sensitivity
- Neodymium magnet assembly with shorting copper cap

The DE640U ring radiator high frequency driver features a Polyimide diaphragm with a neodymium magnet motor. Extensive FEA modelling and physical testing over the last several years has culminated in these 2.5 inch (64mm) coil, ring radiator drivers with outstanding sensitivity, high frequency extension, and compactness. A practical recommended crossover point of 1.2kHz and sensitivity of 109dB allow the DE640U to be suitable for a wide range of applications, including compact two way point source boxes and line arrays. Also available, DE640P, with HT Polymer diaphragm.

B&C Speakers S.p.A. Via Poggiomoro, 1 - Loc. Vallina, 50012 Bagno a Ripoli (FI) | ITALY
Tel. +39 055 65721 | Fax +39 055 6572312 | mail@bcspeakers.com

DE640U 8 Ω

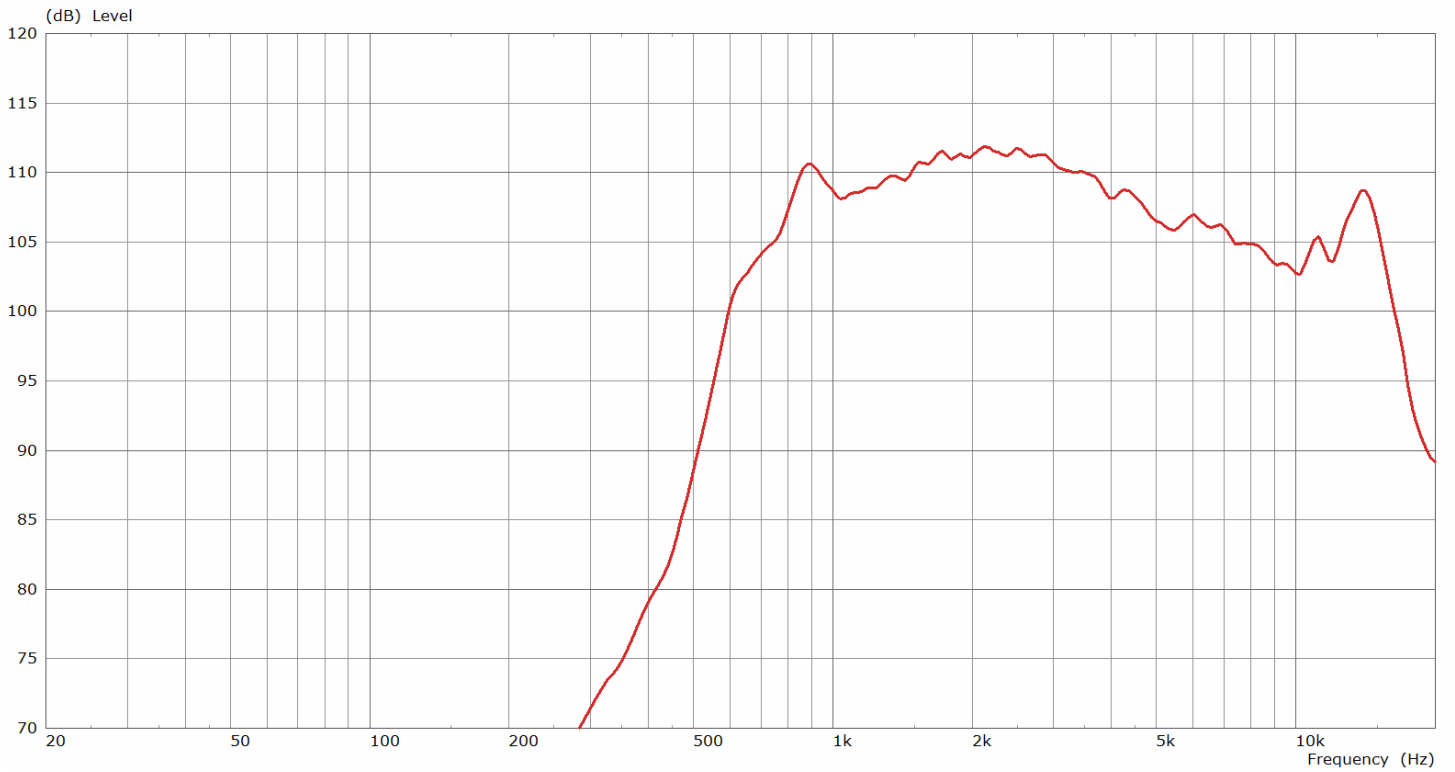

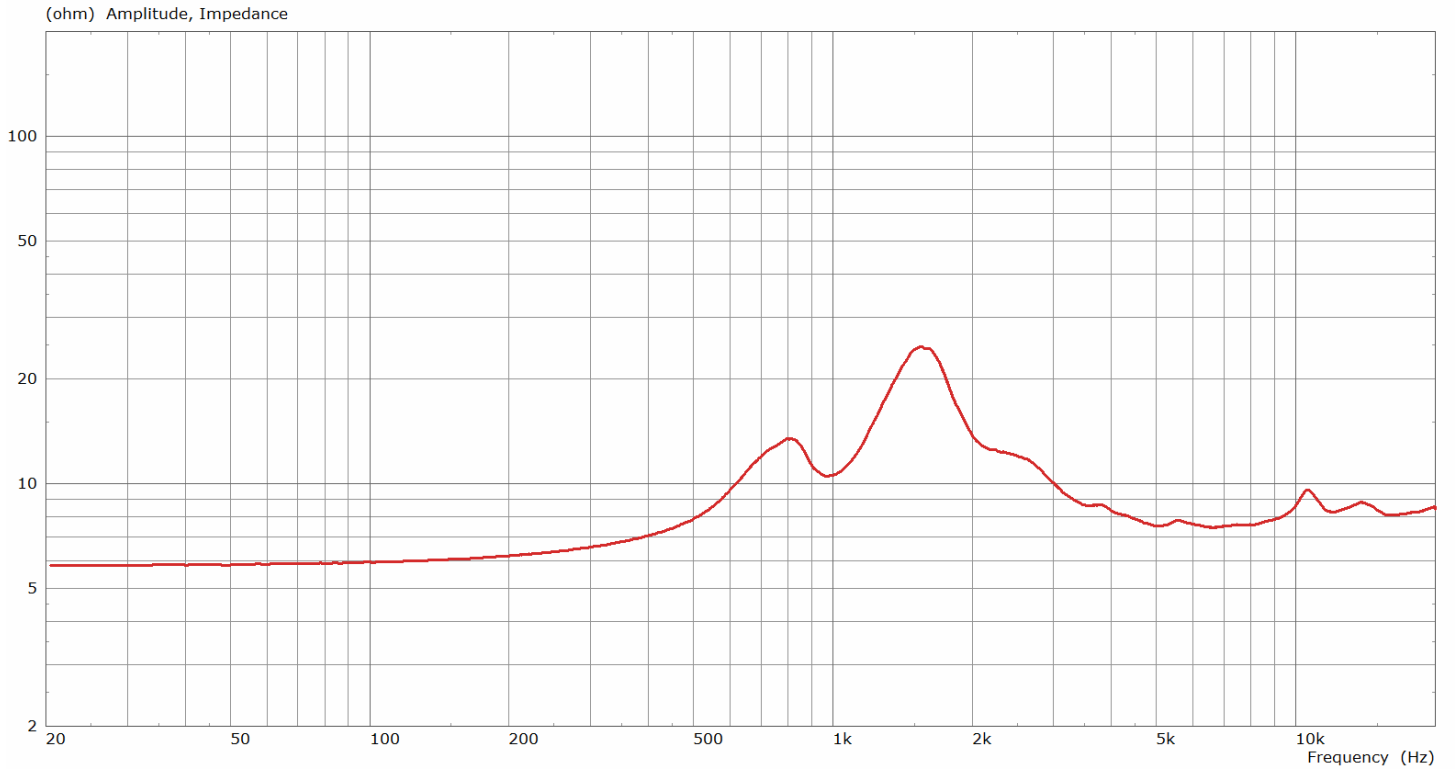

B&C Speakers S.p.A. Via Poggiomoro, 1 - Loc. Vallina, 50012 Bagno a Ripoli (FI) | ITALY
Tel. +39 055 65721 | Fax +39 055 6572312 | mail@bcspeakers.com

DE640U 8 Ω

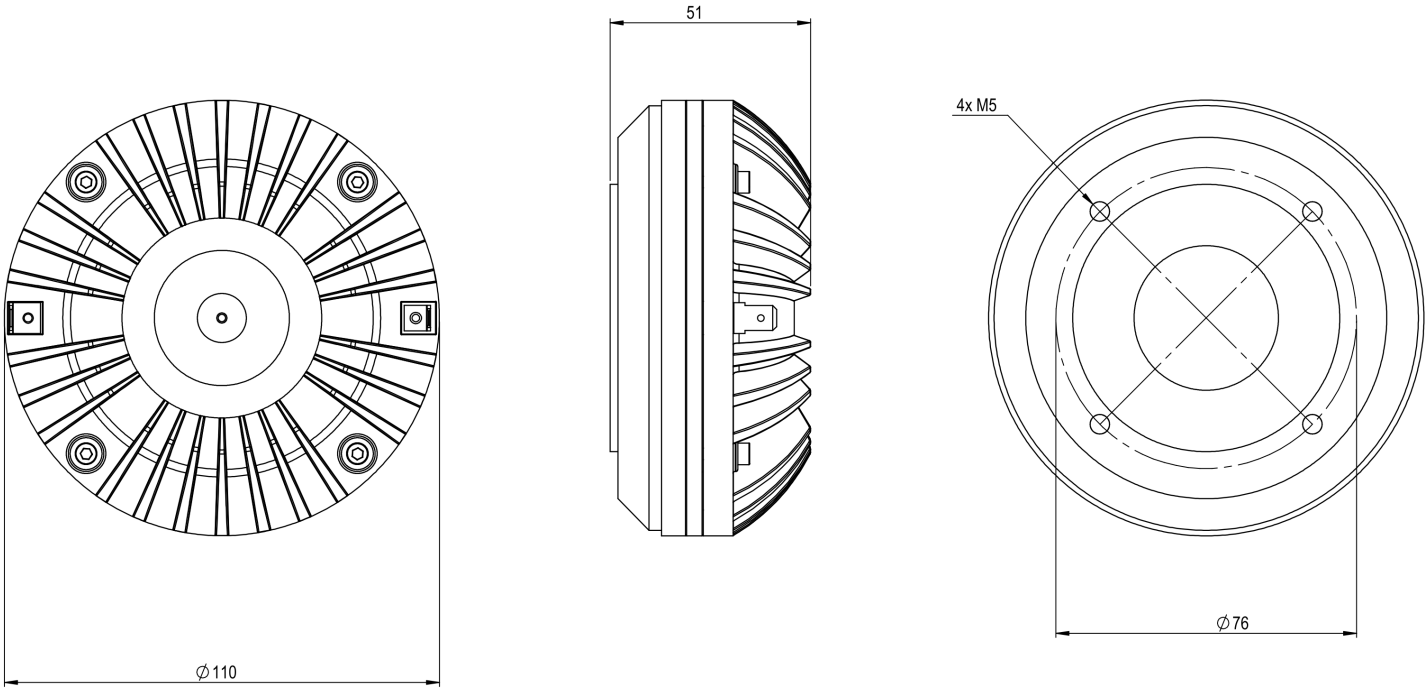

B&C Speakers S.p.A. Via Poggiomoro, 1 - Loc. Vallina, 50012 Bagno a Ripoli (FI) | ITALY
Tel. +39 055 65721 | Fax +39 055 6572312 | mail@bcspeakers.com