DE680TN 8 Ω

SPECIFICATIONS

Driver mounted on B&C ME90 horn

Throat Diameter	**36 mm (1.4 in)**
Nominal Impedance	**8 Ω**
Minimum Impedance	**7.7 Ω**
Nominal Power Handling 2 hour test made with continuous pink noise signal within the range from the recommended crossover frequency to 20 kHz. Power calculated on rated minimum impedance.	**80 W**
Continuous Power Handling Power on Continuous Program is defined as 3 dB greater than the Nominal rating.	**160 W**
Sensitivity Applied RMS Voltage is set to 2.83 V for 8 ohms Nominal Impedance.	**108 dB**
Frequency Range	**1 kHz - 18 kHz**
Recommended Crossover 12 dB/oct. or higher slope high-pass filter.	**1.2 kHz**
Voice Coil Diameter	**65 mm (2.5 in)**
Winding Material	**Aluminium**
Inductance	**0.15 mH**
Flux Density	**1.8 T**
Diaphragm Material	**Titanium**

MOUNTING AND SHIPPING INFO

Four M6 holes 90° on 102 mm (4 in) diameter

Overall Diameter	**115 mm (4.5 in)**
Depth	**51 mm (2.01 in)**
Net Weight	**1.75 kg (3.85 lb)**
Shipping Units	**1 pcs**
Shipping Weight	**1.79 kg (3.94 lb)**
Shipping Box	**120x120x65 mm (4.72x4.72x2.56 in)**

SERVICE KITS

HF replacement-diaphragm	**MMD25BTN8M**



- 160 W continuous program power capacity
- 1.4" horn throat diameter
- 65 mm (2.5 in) aluminium voice coil
- Titanium diaphragm
- 1000 - 18000 Hz response
- 108 dB sensitivity
- Neodymium magnet assembly with shorting copper cap

The DE680TN is the latest version of our premium 65 mm (2.5 in) voice coil, neodymium high frequency driver. The diaphragm in this model has been completely redesigned to incorporate a bent edge voice coil former, as well as new dome and surround geometry. These modifications combine to better control diaphragm displacement and deformations, resulting in lower distortion and a smoother higher frequency response above 10kHz.

B&C Speakers S.p.A. Via Poggiomoro, 1 - Loc. Vallina, 50012 Bagno a Ripoli (FI) | ITALY
Tel. +39 055 65721 | Fax +39 055 6572312 | mail@bcspeakers.com

DE680TN 8 Ω

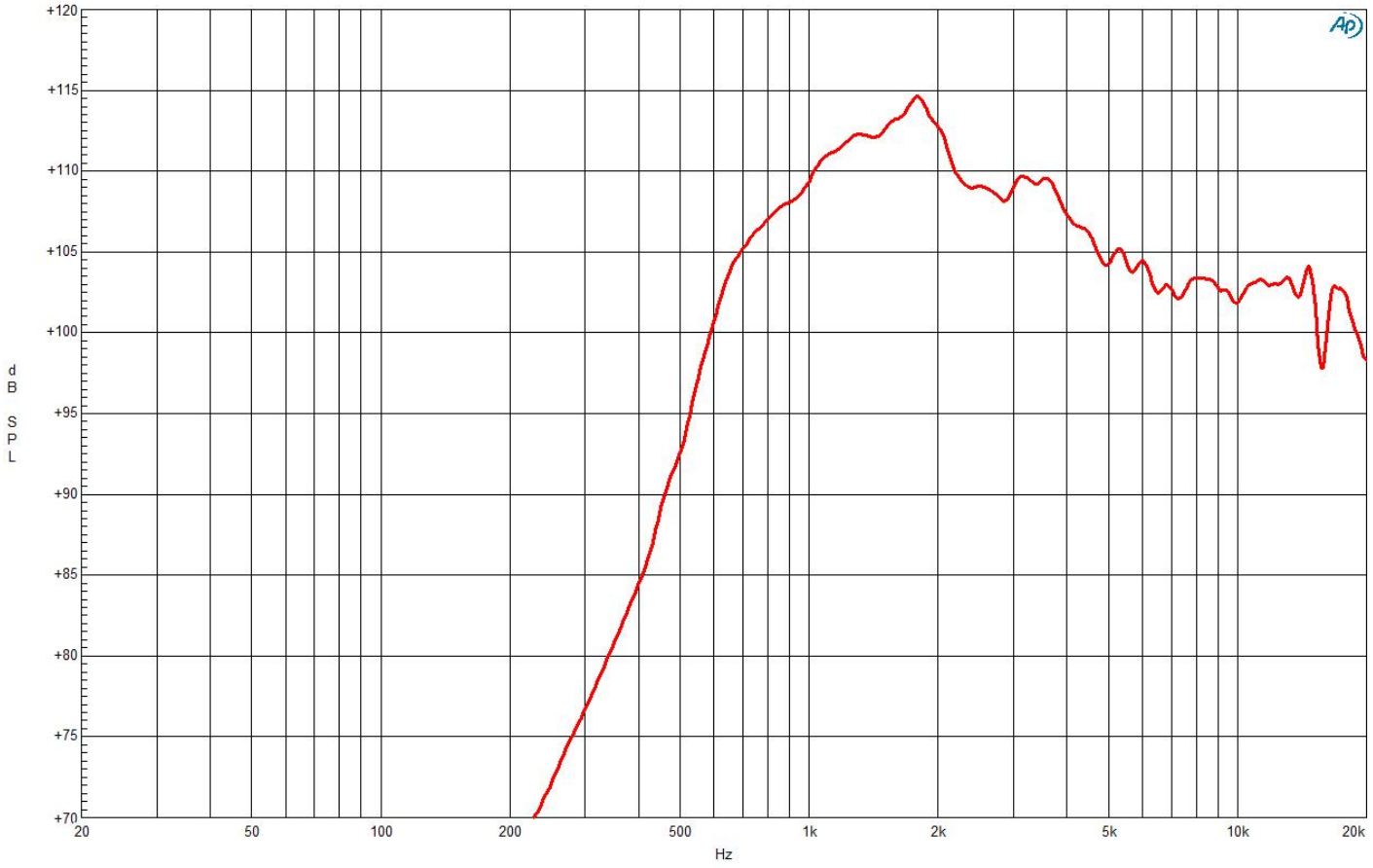

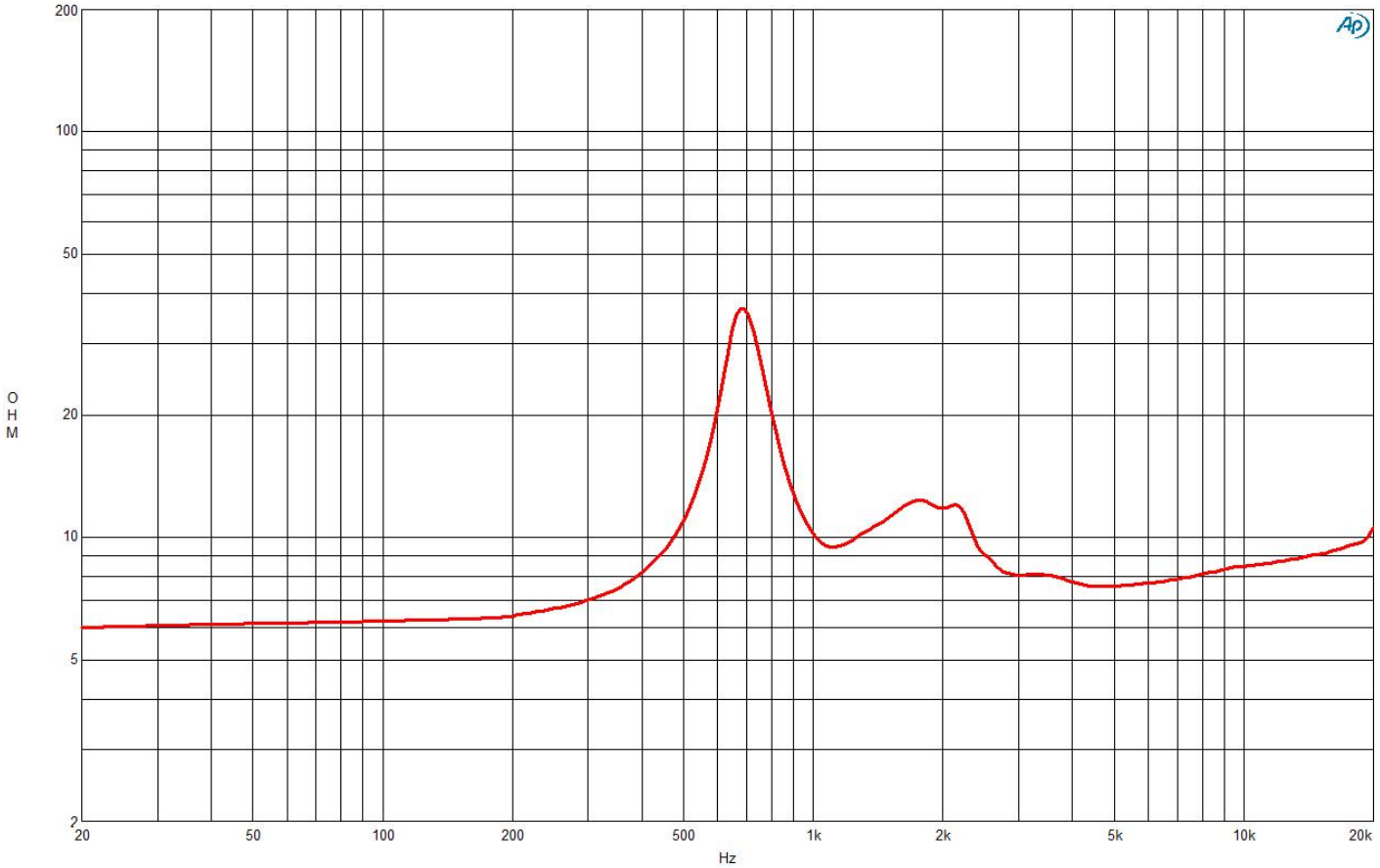

B&C Speakers S.p.A. Via Poggiomoro, 1 - Loc. Vallina, 50012 Bagno a Ripoli (FI) | ITALY
Tel. +39 055 65721 | Fax +39 055 6572312 | mail@bcspeakers.com

DE680TN 8 Ω

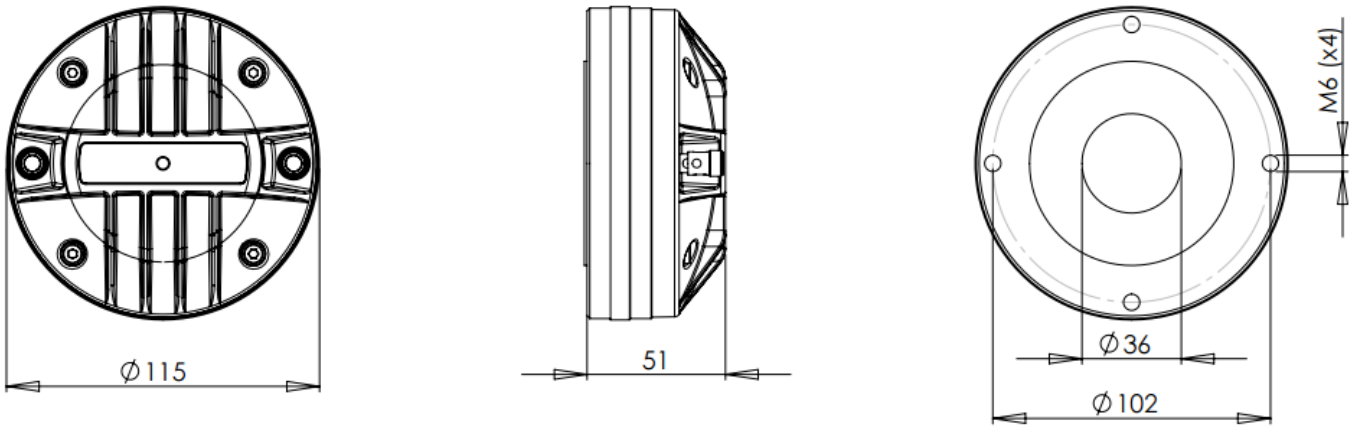

B&C Speakers S.p.A. Via Poggiomoro, 1 - Loc. Vallina, 50012 Bagno a Ripoli (FI) | ITALY
Tel. +39 055 65721 | Fax +39 055 6572312 | mail@bcspeakers.com