# DE980TN 8 Ω

## SPECIFICATIONS

Driver mounted on B&C ME 90 horn.

| | |
|---|---|
| Throat Diameter | **36 mm (1.4 in)** |
| Nominal Impedance | **8 Ω** |
| Minimum Impedance | **8.1 Ω** |
| Nominal Power Handling<br>2 hour test made with continuous pink noise signal within the range from the recommended crossover frequency to 20 kHz. Power calculated on rated minimum impedance. | **110 W** |
| Continuous Power Handling<br>Power on Continuous Program is defined as 3 dB greater than the Nominal rating. | **220 W** |
| Sensitivity<br>Applied RMS Voltage is set to 2.83 V for 8 ohms Nominal Impedance. | **108.5 dB** |
| Frequency Range | **0.5 kHz - 18 kHz** |
| Recommended Crossover<br>12 dB/oct. or higher slope high-pass filter. | **1.2 kHz** |
| Voice Coil Diameter | **75 mm (3 in)** |
| Winding Material | **Aluminium** |
| Inductance | **0.1 mH** |
| Flux Density | **2.05 T** |
| Diaphragm Material | **Titanium** |

## MOUNTING AND SHIPPING INFO

Four M6 holes 90° on 102 mm (4 in) diameter

| | |
|---|---|
| Overall Diameter | **131 mm (5.2 in)** |
| Depth | **54 mm (2.13 in)** |
| Net Weight | **2.3 kg (5.1 lb)** |
| Shipping Units | **1 pcs** |
| Shipping Weight | **2.35 kg (5.17 lb)** |
| Shipping Box | **140x135x62 mm (5.51x5.31x2.44 in)** |

## SERVICE KITS

| | |
|---|---|
| HF replacement-diaphragm | **MMD3DTN8M** |




220 W continuous program power capacity
1.4" horn throat diameter
75 mm (3 in) aluminium voice coil
Titanium diaphragm
500 - 18000 Hz response
108.5 dB sensitivity
Neodymium magnet assembly with shorting copper cap

The DE980TN is the latest version of our 75mm (3.0 in) voice coil, neodymium high frequency driver. The diaphragm in this model has been completely redesigned to incorporate a bent edge voice coil former, new dome and surround geometry and an optimized phase plug. These modifications combine to better control diaphragm displacement and deformations, resulting in lower distortion and a smoother higher frequency response above 10kHz.



**B&C Speakers S.p.A.** Via Poggiomoro, 1 - Loc. Vallina, 50012 Bagno a Ripoli (FI) | ITALY
Tel. +39 055 65721 | Fax +39 055 6572312 | mail@bcspeakers.com

# DE980TN 8 Ω

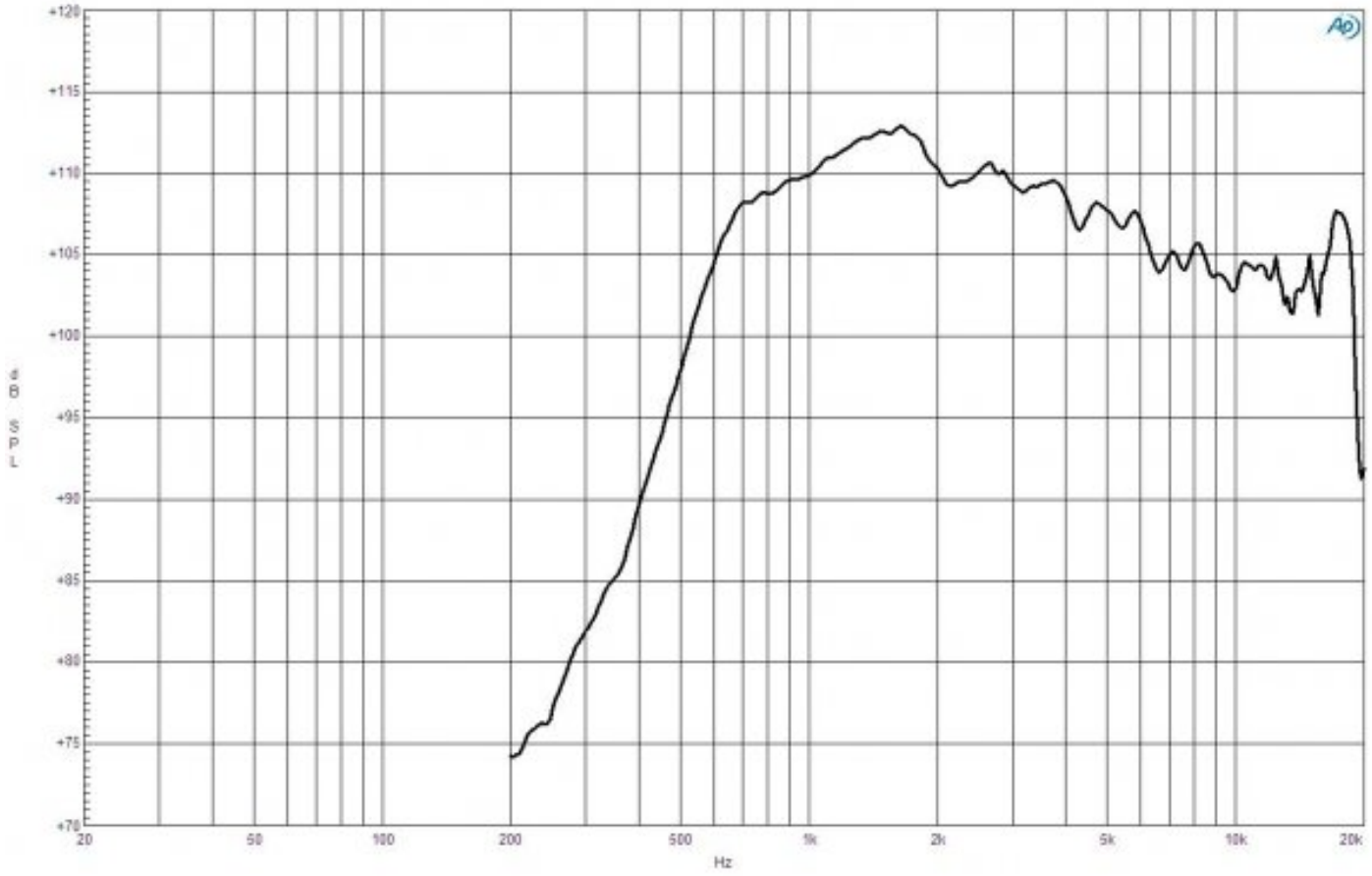


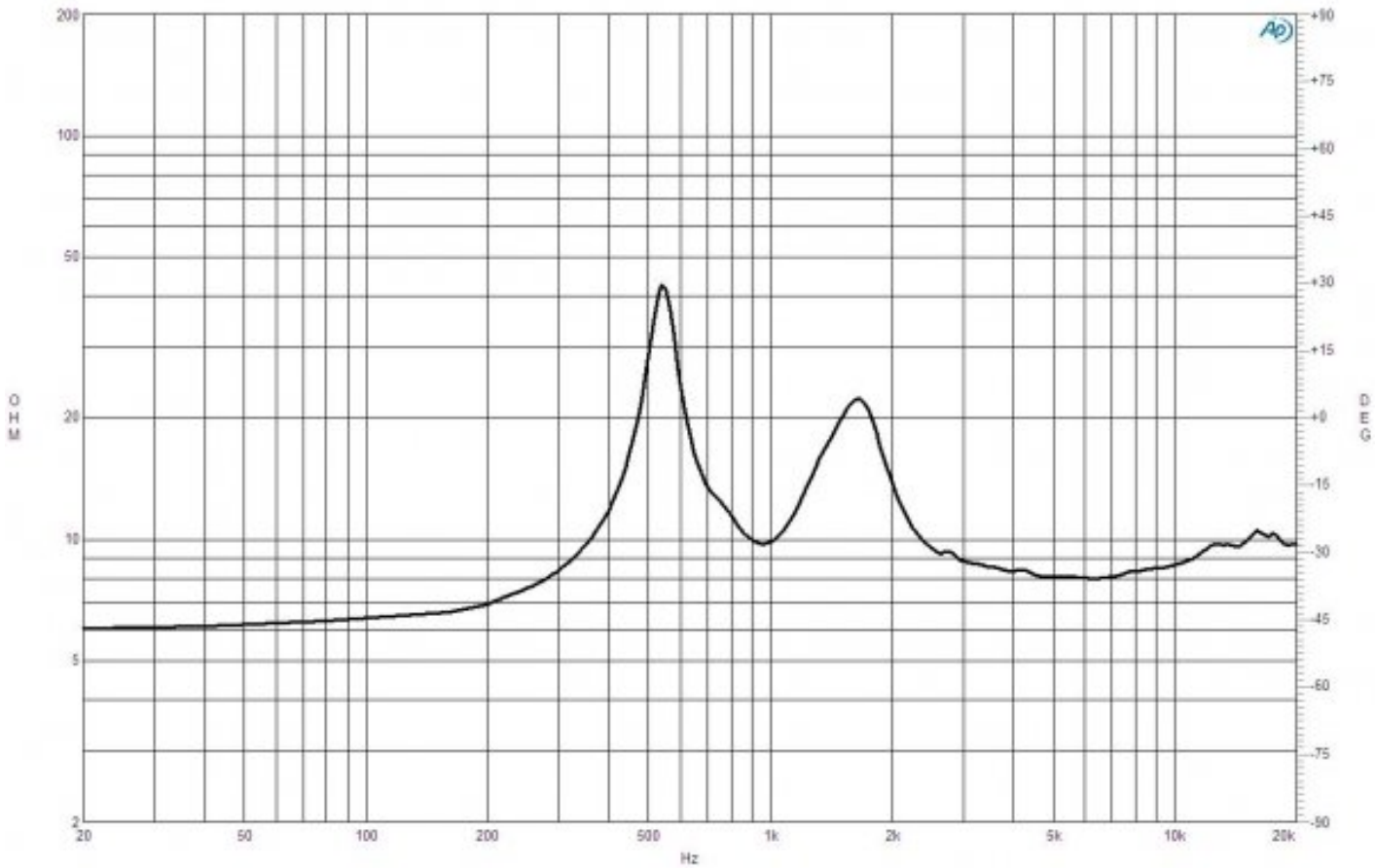



**B&C Speakers S.p.A.** Via Poggiomoro, 1 - Loc. Vallina, 50012 Bagno a Ripoli (FI) | ITALY
Tel. +39 055 65721 | Fax +39 055 6572312 | mail@bcspeakers.com

# DE980TN 8 Ω

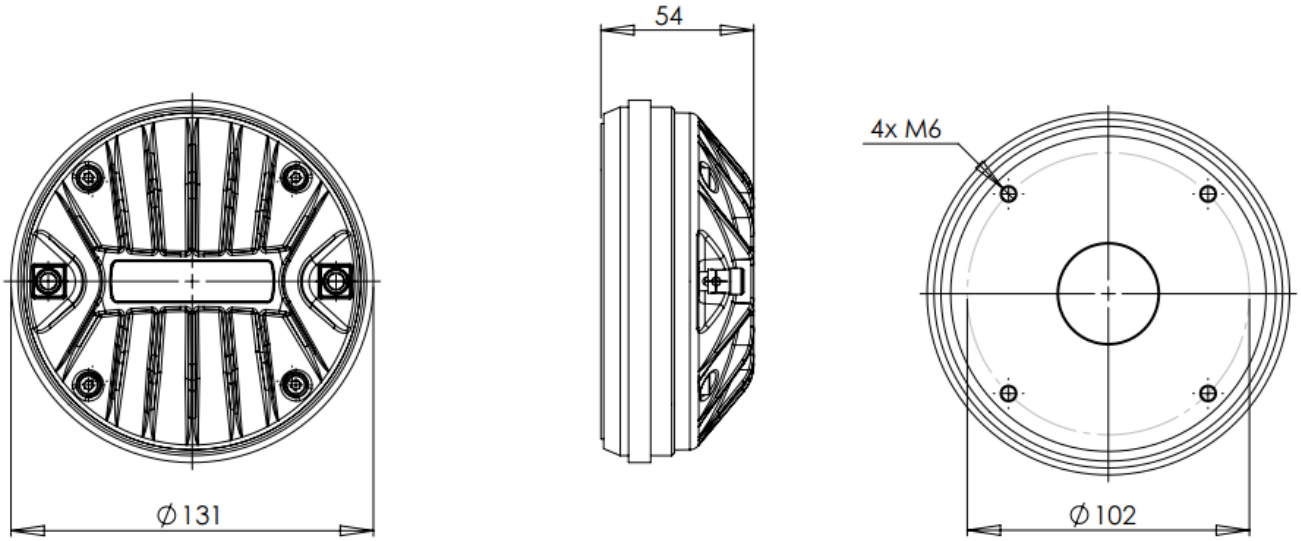



**B&C Speakers S.p.A.** Via Poggiomoro, 1 - Loc. Vallina, 50012 Bagno a Ripoli (FI) | ITALY
Tel. +39 055 65721 | Fax +39 055 6572312 | mail@bcspeakers.com