DE180 8 Ω

SPECIFICATIONS

Driver mounted on B&C ME 45 horn.

Throat Diameter	**25 mm (1 in)**
Nominal Impedance	**8 Ω**
Minimum Impedance	**7.4 Ω**
Nominal Power Handling 2 hour test made with continuous pink noise signal within the range from the recommended crossover frequency to 20 kHz. Power calculated on rated minimum impedance.	**60 W**
Continuous Power Handling Power on Continuous Program is defined as 3 dB greater than the Nominal rating.	**120 W**
Sensitivity Applied RMS Voltage is set to 2.83 V for 8 ohms Nominal Impedance.	**106.5 dB**
Frequency Range	**1 kHz - 17 kHz**
Recommended Crossover 12 dB/oct. or higher slope high-pass filter.	**2 kHz**
Voice Coil Diameter	**44 mm (1.7 in)**
Winding Material	**Aluminium**
Inductance	**0.12 mH**
Flux Density	**1.35 T**
Diaphragm Material	**Polyimide**

MOUNTING AND SHIPPING INFO

Two M6 holes 180° on 76 mm (3 in) diameter

Overall Diameter	**102 mm (4 in)**
Depth	**61 mm (2.4 in)**
Net Weight	**1.7 kg (3.75 lb)**
Shipping Units	**1 pcs**
Shipping Weight	**1.73 kg (3.81 lb)**
Shipping Box	**105x105x65 mm (4.13x4.13x2.56 in)**

SERVICE KITS

HF replacement-diaphragm	**MMDDE1808**

- 120 W continuous program power capacity
- 1' horn throat diameter
- 44 mm (1.7 in) aluminium voice coil
- Polyimide diaphragm
- 1000 - 17000 Hz response
- 106.5 dB sensitivity



B&C Speakers S.p.A. Via Poggiomoro, 1 - Loc. Vallina, 50012 Bagno a Ripoli (FI) | ITALY
Tel. +39 055 65721 | Fax +39 055 6572312 | mail@bcspeakers.com

DE180 8 Ω

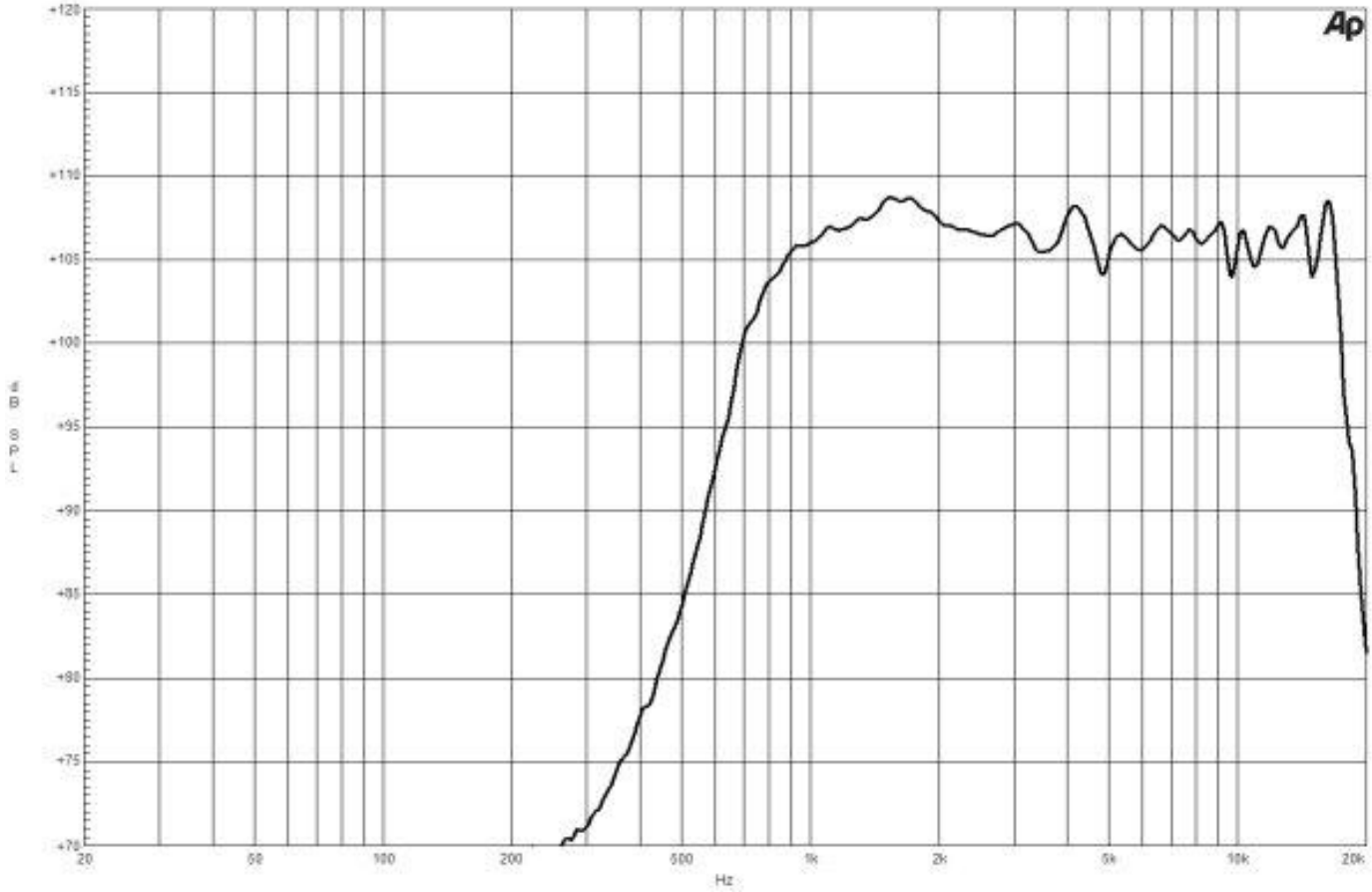
dB SPL
Hz
20
50
100
200
500
1k
2k
5k
10k
20k

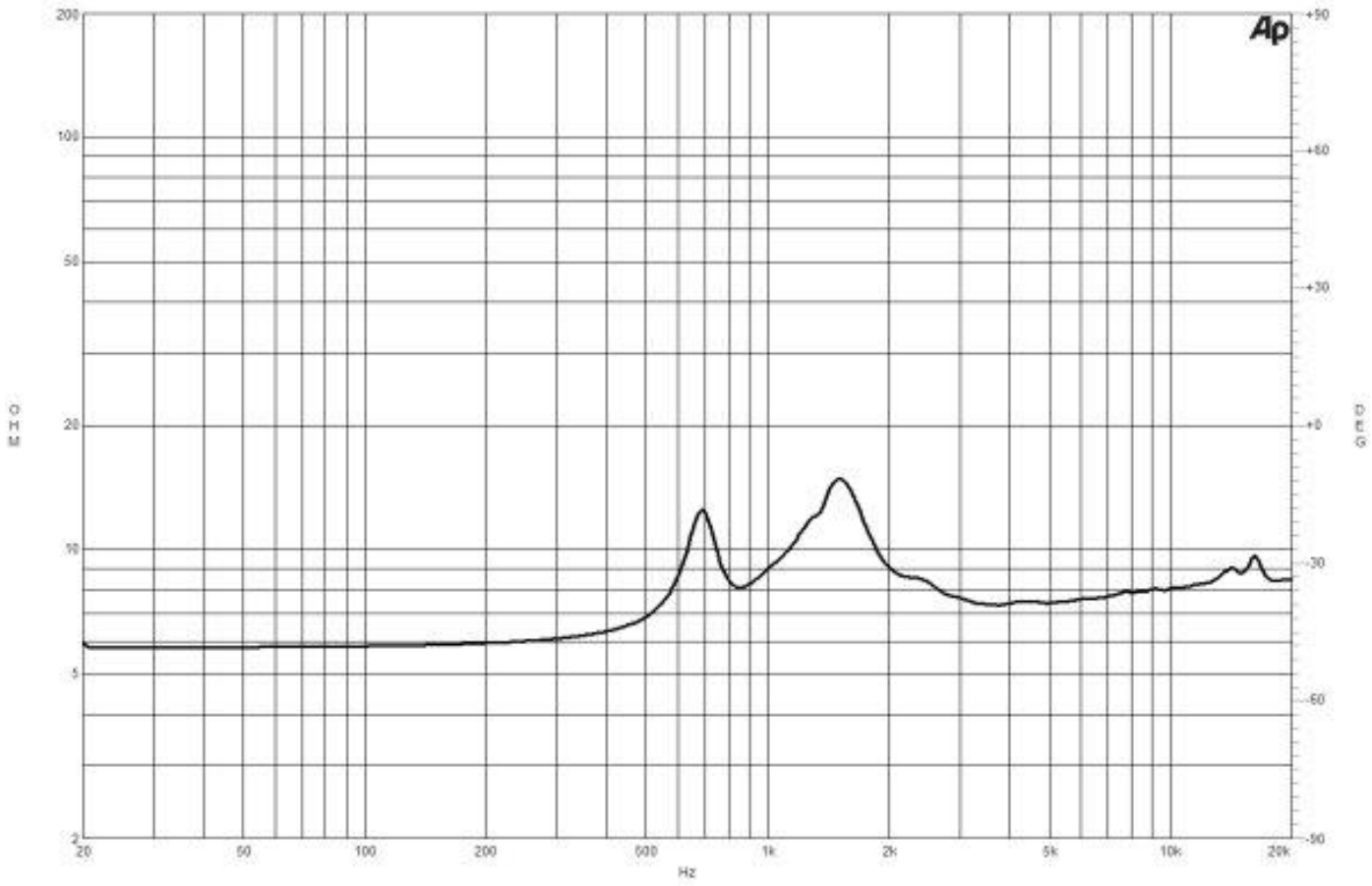
OHM
DEG
Hz
20
50
100
200
500
1k
2k
5k
10k
20k

DE180 8 Ω

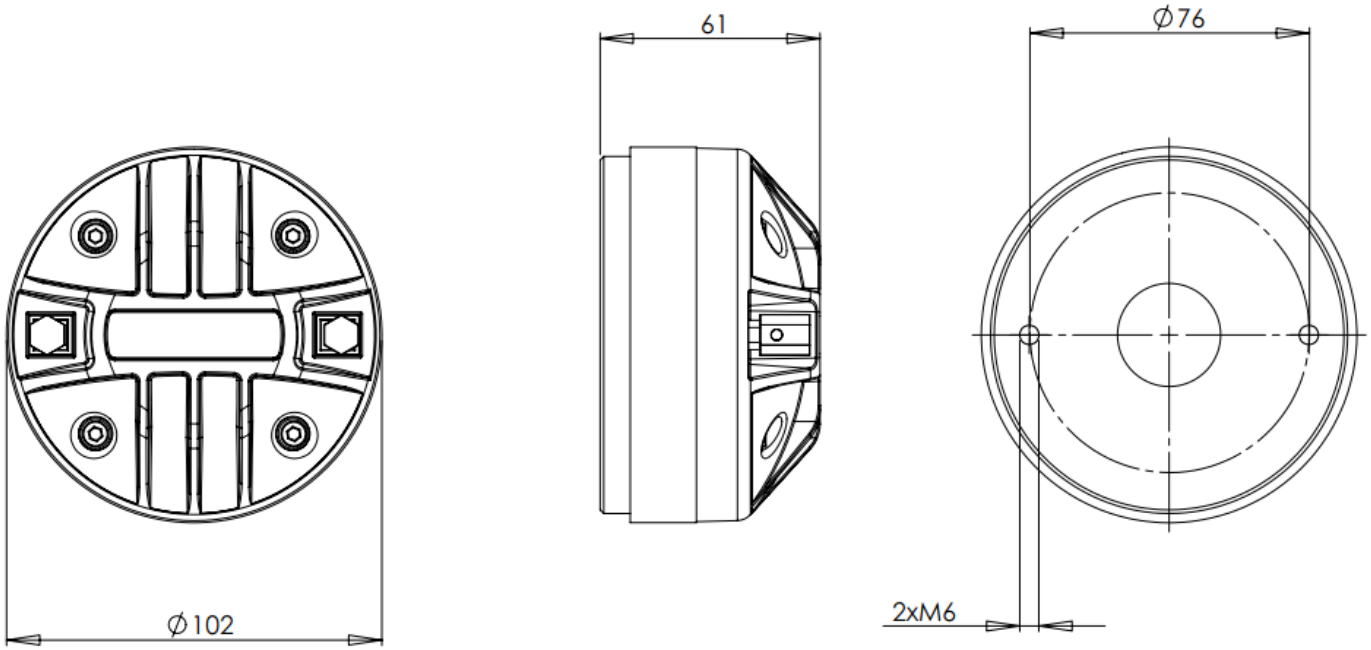

B&C Speakers S.p.A. Via Poggiomoro, 1 - Loc. Vallina, 50012 Bagno a Ripoli (FI) | ITALY
Tel. +39 055 65721 | Fax +39 055 6572312 | mail@bcspeakers.com