DE502 8 Ω

SPECIFICATIONS

Driver mounted on B&C ME 45 horn.

Throat Diameter	**25 mm (1 in)**
Nominal Impedance	**8 Ω**
Minimum Impedance	**7.3 Ω**
Nominal Power Handling 2 hour test made with continuous pink noise signal within the range from the recommended crossover frequency to 20 kHz. Power calculated on rated minimum impedance.	**50 W**
Continuous Power Handling Power on Continuous Program is defined as 3 dB greater than the Nominal rating.	**100 W**
Sensitivity Applied RMS Voltage is set to 2.83 V for 8 ohms Nominal Impedance.	**107 dB**
Frequency Range	**1 kHz - 18 kHz**
Recommended Crossover 12 dB/oct. or higher slope high-pass filter.	**1.5 kHz**
Voice Coil Diameter	**44 mm (1.7 in)**
Winding Material	**Aluminium**
Inductance	**0.12 mH**
Flux Density	**1.9 T**
Diaphragm Material	**Titanium**

MOUNTING AND SHIPPING INFO

Two M6 holes 180° on 76 mm (3 in) diameter Three M6 holes 120° on 57 mm (2.2 in) diameter

Overall Diameter	**102 mm (4 in)**
Depth	**51 mm (2 in)**
Net Weight	**1.4 kg (3.1 lb)**
Shipping Units	**1 pcs**
Shipping Weight	**1.43 kg (3.14 lb)**
Shipping Box	**105x105x65 mm (4.13x4.13x2.56 in)**

SERVICE KITS

HF replacement-diaphragm	**MMD5028**



- 100 W continuous program power capacity
- 1' horn throat diameter
- 44 mm (1.7 in) aluminium voice coil
- Titanium diaphragm
- 1000 - 18000 Hz response
- 107 dB sensitivity
- Optimized Neodymium magnet assembly
- Shorting copper cap for extended HF response

The DE502 replaces the well established DE500. The full titanium diaphragm used in the DE502 has been updated with new geometry to significantly lower distortion, while improving the stability and reliability of the driver. Most other specifications and the sonic signature are quite similar to the DE500.

B&C Speakers S.p.A. Via Poggiomoro, 1 - Loc. Vallina, 50012 Bagno a Ripoli (FI) | ITALY
Tel. +39 055 65721 | Fax +39 055 6572312 | mail@bcspeakers.com

DE502 8 Ω

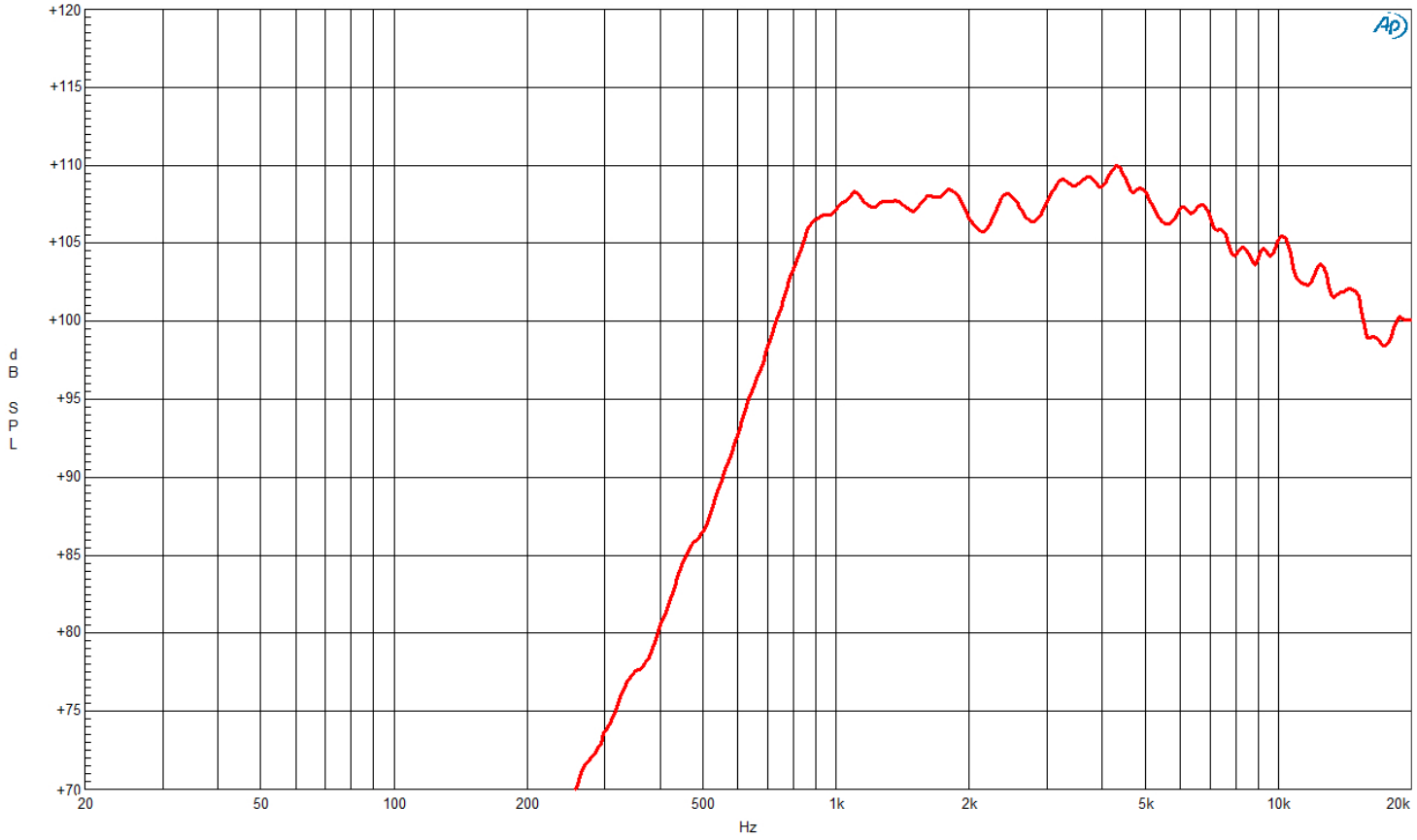

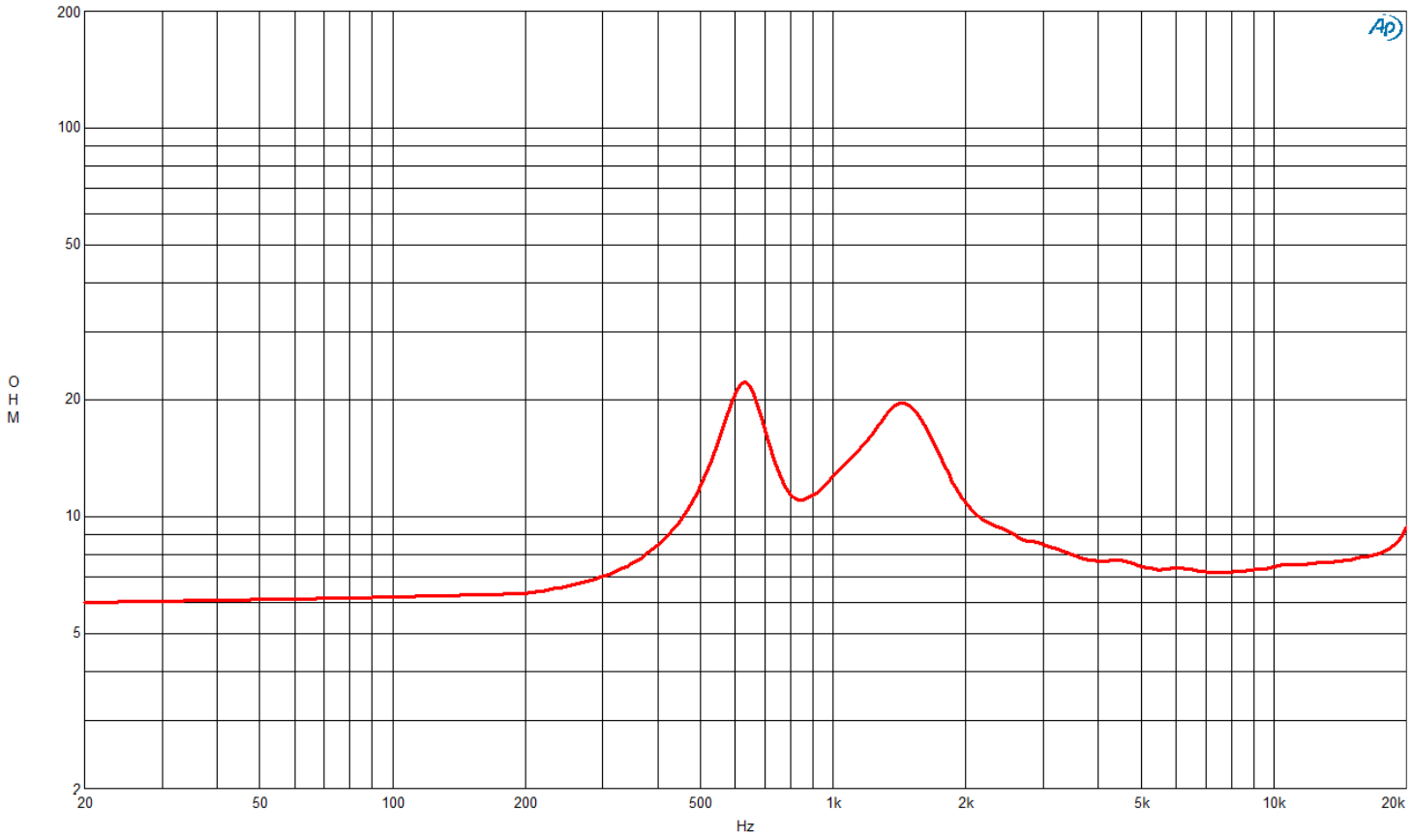

B&C Speakers S.p.A. Via Poggiomoro, 1 - Loc. Vallina, 50012 Bagno a Ripoli (FI) | ITALY
Tel. +39 055 65721 | Fax +39 055 6572312 | mail@bcspeakers.com

DE502 8 Ω

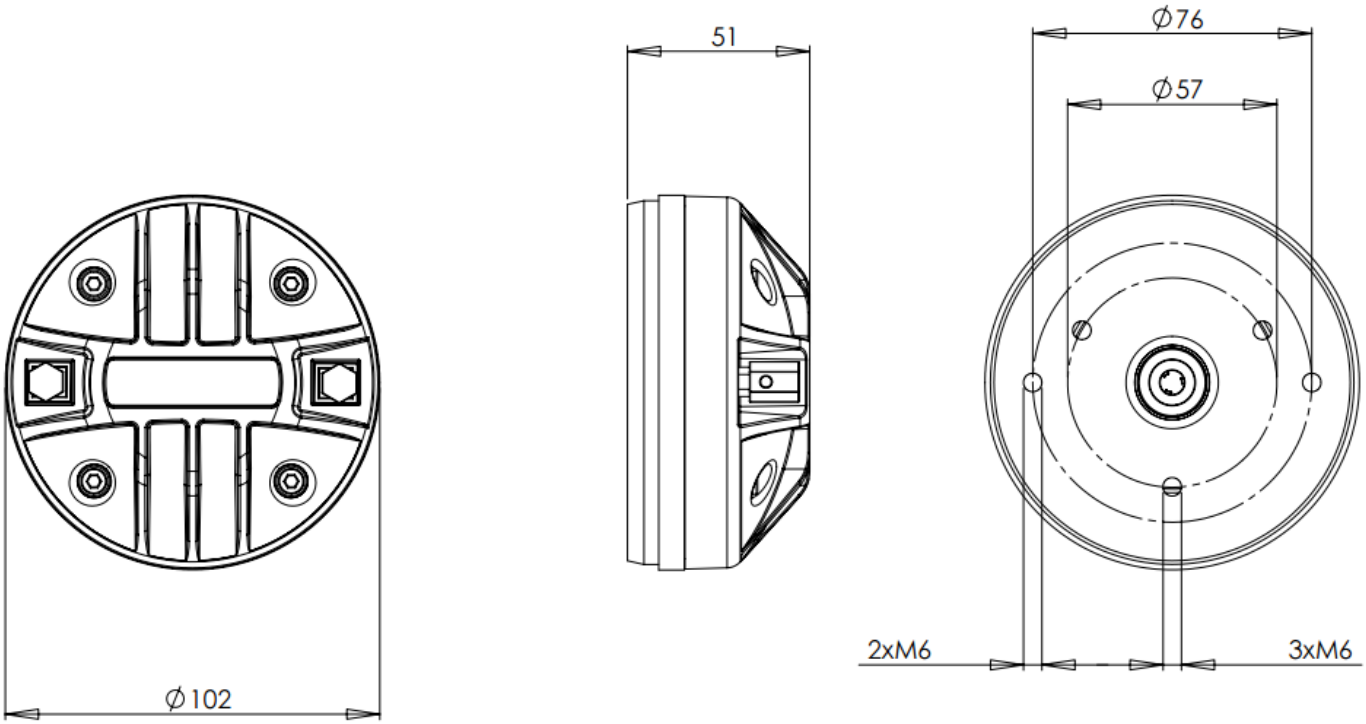

B&C Speakers S.p.A. Via Poggiomoro, 1 - Loc. Vallina, 50012 Bagno a Ripoli (FI) | ITALY
Tel. +39 055 65721 | Fax +39 055 6572312 | mail@bcspeakers.com