DH450H 8 Ω

SPECIFICATIONS

Driver mounted on B&C ME 45 horn.

Throat Diameter	**25 mm (1 in)**
Nominal Impedance	**8 Ω**
Minimum Impedance	**7.8 Ω**
Nominal Power Handling 2 hour test made with continuous pink noise signal within the range from the recommended crossover frequency to 20 kHz. Power calculated on rated minimum impedance.	**40 W**
Continuous Power Handling Power on Continuous Program is defined as 3 dB greater than the Nominal rating.	**80 W**
Sensitivity Applied RMS Voltage is set to 2.83 V for 8 ohms Nominal Impedance.	**109 dB**
Frequency Range	**1 kHz - 18 kHz**
Recommended Crossover 12 dB/oct. or higher slope high-pass filter.	**1 kHz**
Voice Coil Diameter	**44 mm (1.7 in)**
Winding Material	**Aluminium**
Inductance	**0.16 mH**
Flux Density	**1.9 T**
Diaphragm Material	**HT Polymer**

MOUNTING AND SHIPPING INFO

Two M5 holes 180° on 57 mm (2.24 in) diameter. Diameter is 90mm at widest point (driver rotated, across mounting studs).

Overall Diameter	**69 mm (2.72 in)**
Depth	**65 mm (2.56 in)**
Net Weight	**0.6 kg (1.32 lb)**
Shipping Units	**1 pcs**
Shipping Weight	**0.64 kg (1.41 lb)**
Shipping Box	**120x120x65 mm (4.72x4.72x2.56 in)**

SERVICE KITS

HF replacement-diaphragm	**MMDDH4508**

- Very Compact 69 mm diameter
- 80 W continuous program power capacity
- 1" horn throat diameter
- 44 mm (1.7 in) aluminium voice coil
- HT Polymer diaphragm
- 1000 - 18000 Hz response
- 109 dB sensitivity

HLX Series - The Helical Approach

B&C has a reputation for performance, by turning the limits of traditional compression driver design on their head. HLX™ : Compression driver efficiency in miniature. TheHLX™ phase plug (US Patent #12149906) has a central channel that is twisted, like DNA, to gain the length required to match the outer channels. This technique works with standard, cost-effective injection mold tooling and plastics by rotating the inner die along a screw profile. The convex dome design, so achieved, has a number of significant cost and performance advantages.

- Minimized diameter, weight, and cost
- Increased diaphragm area
- Low, ~1kHz Crossover point
- Reduced distortion, especially intermodulation distortion
- More efficient magnetic flux use





B&C Speakers S.p.A. Via Poggiomoro, 1 - Loc. Vallina, 50012 Bagno a Ripoli (FI) | ITALY
Tel. +39 055 65721 | Fax +39 055 6572312 | mail@bcspeakers.com

DH450H 8 Ω

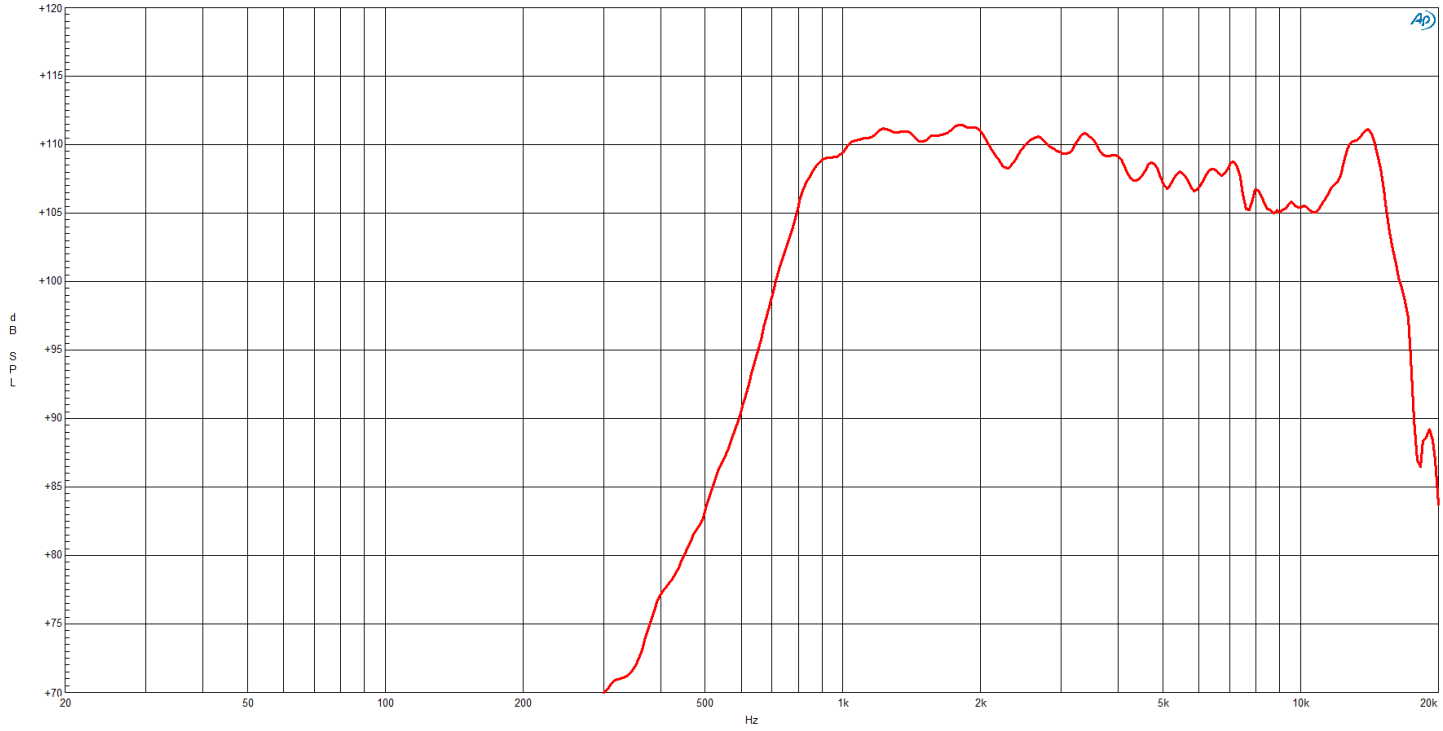

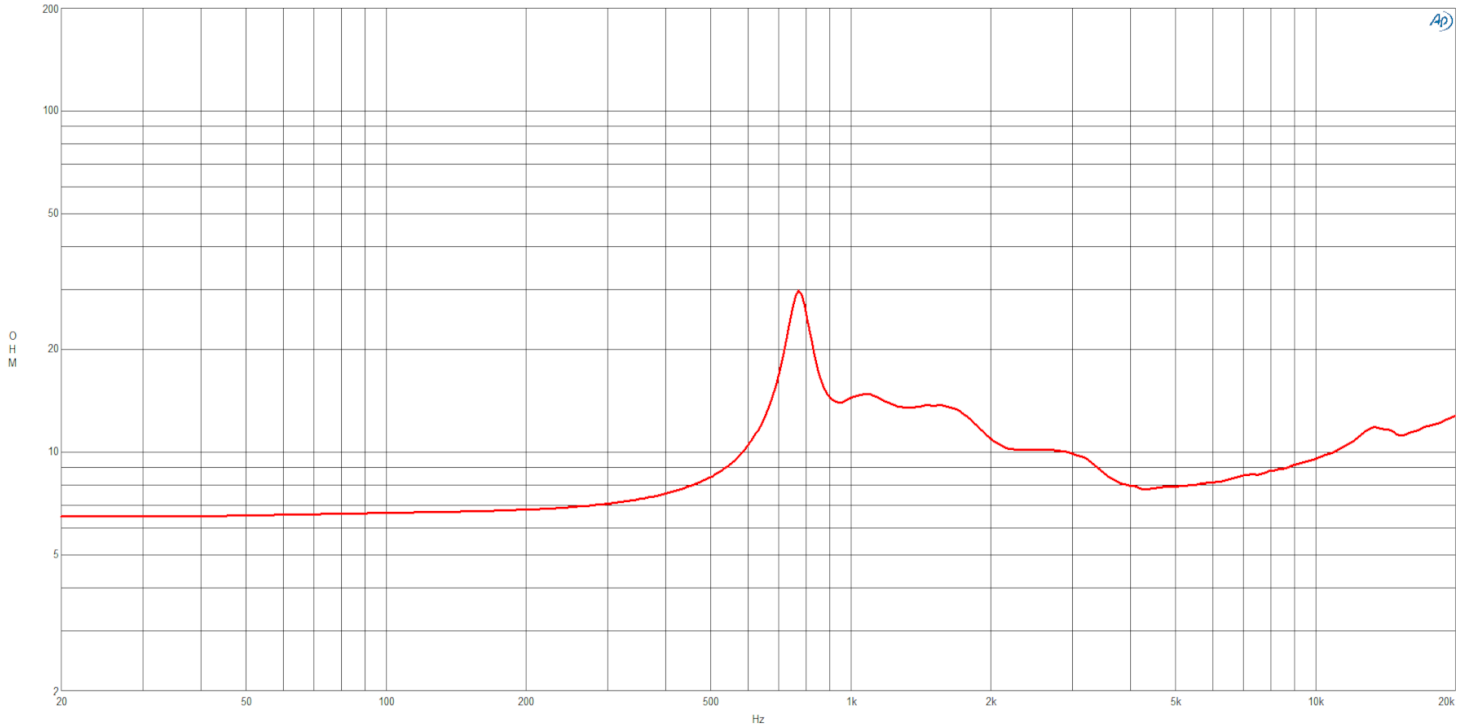

B&C SPEAKERS

Professional loudspeaker transducers since 1946

B&C Speakers S.p.A. Via Poggiomoro, 1 - Loc. Vallina, 50012 Bagno a Ripoli (FI) | ITALY
Tel. +39 055 65721 | Fax +39 055 6572312 | mail@bcspeakers.com

DH450H 8 Ω

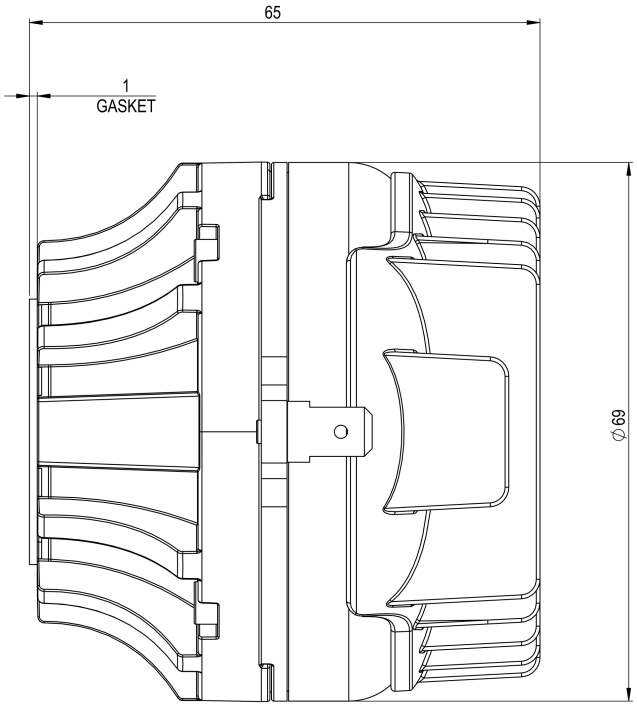

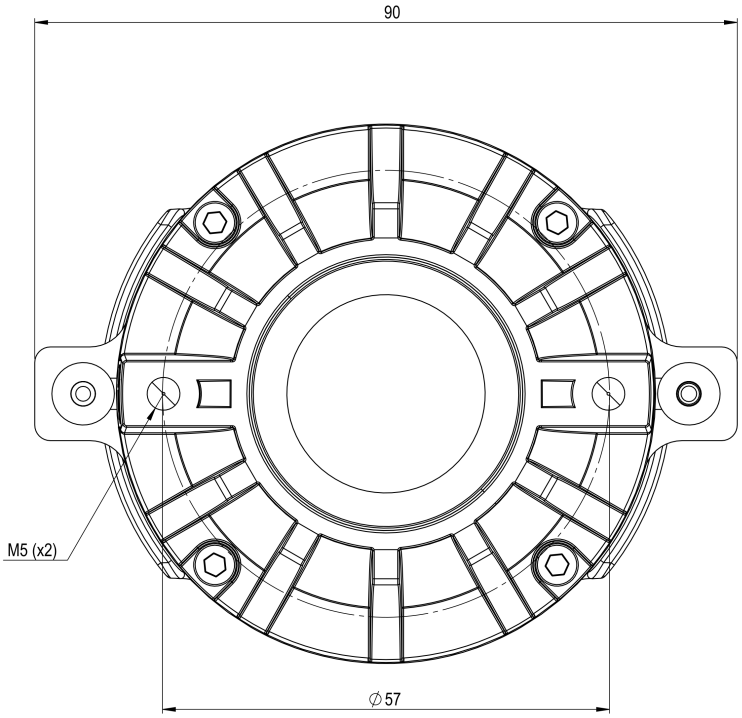

B&C Speakers S.p.A. Via Poggiomoro, 1 - Loc. Vallina, 50012 Bagno a Ripoli (FI) | ITALY
Tel. +39 055 65721 | Fax +39 055 6572312 | mail@bcspeakers.com