# DCM420 8 Ω

## SPECIFICATIONS

Driver mounted on B&C LAB exponential horn.

| | |
|---|---|
| Throat Diameter | **50 mm (2 in)** |
| Nominal Impedance | **8 Ω** |
| Minimum Impedance | **6.7 Ω** |
| Nominal Power Handling<br>2 hour test made with continuous pink noise signal within the range from the recommended crossover frequency to 20 kHz. Power calculated on rated minimum impedance. | **110 W** |
| Continuous Power Handling<br>Power on Continuous Program is defined as 3 dB greater than the Nominal rating. | **220 W** |
| Sensitivity<br>Applied RMS Voltage is set to 2.83 V for 8 ohms Nominal Impedance. | **112 dB** |
| Frequency Range | **0.3 kHz - 6 kHz** |
| Recommended Crossover<br>12 dB/oct. or higher slope high-pass filter. | **0.3 kHz** |
| Voice Coil Diameter | **100 mm (4 in)** |
| Winding Material | **Aluminium** |
| Inductance | **0.28 mH** |
| Flux Density | **1.9 T** |
| Diaphragm Material | **HT Polymer** |

## MOUNTING AND SHIPPING INFO

Four M6 holes 90° on 102 mm (4 in) diameter

| | |
|---|---|
| Overall Diameter | **152 mm (6 in)** |
| Depth | **95 mm (3.74 in)** |
| Net Weight | **2.6 kg (5.73 lb)** |
| Shipping Units | **1 pcs** |
| Shipping Weight | **2.8 kg (6.17 lb)** |
| Shipping Box | **170x170x140 mm (6.69x6.69x5.51 in)** |

## SERVICE KITS

| | |
|---|---|
| HF replacement-diaphragm | **MMDDCX464MF8** |



- 220 W continuous program power capacity
- 2" horn throat diameter
- 300 - 6000 Hz response
- 112 dB sensitivity
- Neodymium magnet assembly

B&C engineers have been working for the last five years on a family of next generation high frequency devices. Compression drivers are the linchpin of a PA system: operating at wavelengths too small to readily couple with other drivers, they alone have to fight distance and atmospheric losses to deliver concert sound pressure levels to ever larger audiences.

Enter the DCM420 ring radiator midrange driver, designed from scratch to advance the state of the art. The DCM420's midrange diaphragm covers 300Hz – 6.0kHz with 112 dB sensitivity (8 Ohm version), and its 100mm voice coil handles 220 watts. All this energy arrives at a 2" throat, from the most compact package that can be designed today.

Brand new materials and thousands of hours of modelling and testing result in lower distortion at higher SPL than has ever been possible before. Consider the new DCM420 for your next design, and enjoy a new standard in fidelity, with the reliability and consistency you expect from B&C.



**B&C Speakers S.p.A.** Via Poggiomoro, 1 - Loc. Vallina, 50012 Bagno a Ripoli (FI) | ITALY
Tel. +39 055 65721 | Fax +39 055 6572312 | mail@bcspeakers.com

# DCM420 8 Ω

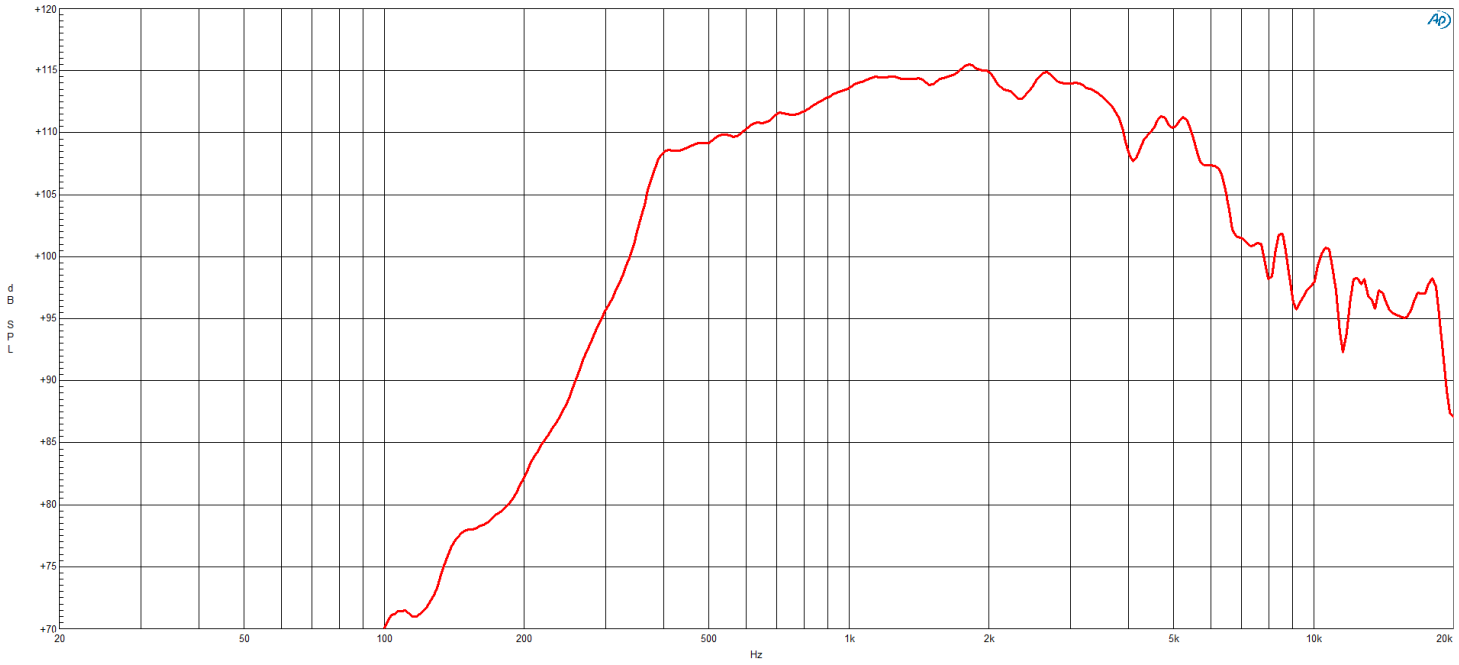
+120
+115
+110
+105
+100
+95
+90
+85
+80
+75
+70
dB SPL
20
50
100
200
500
1k
2k
5k
10k
20k
Hz

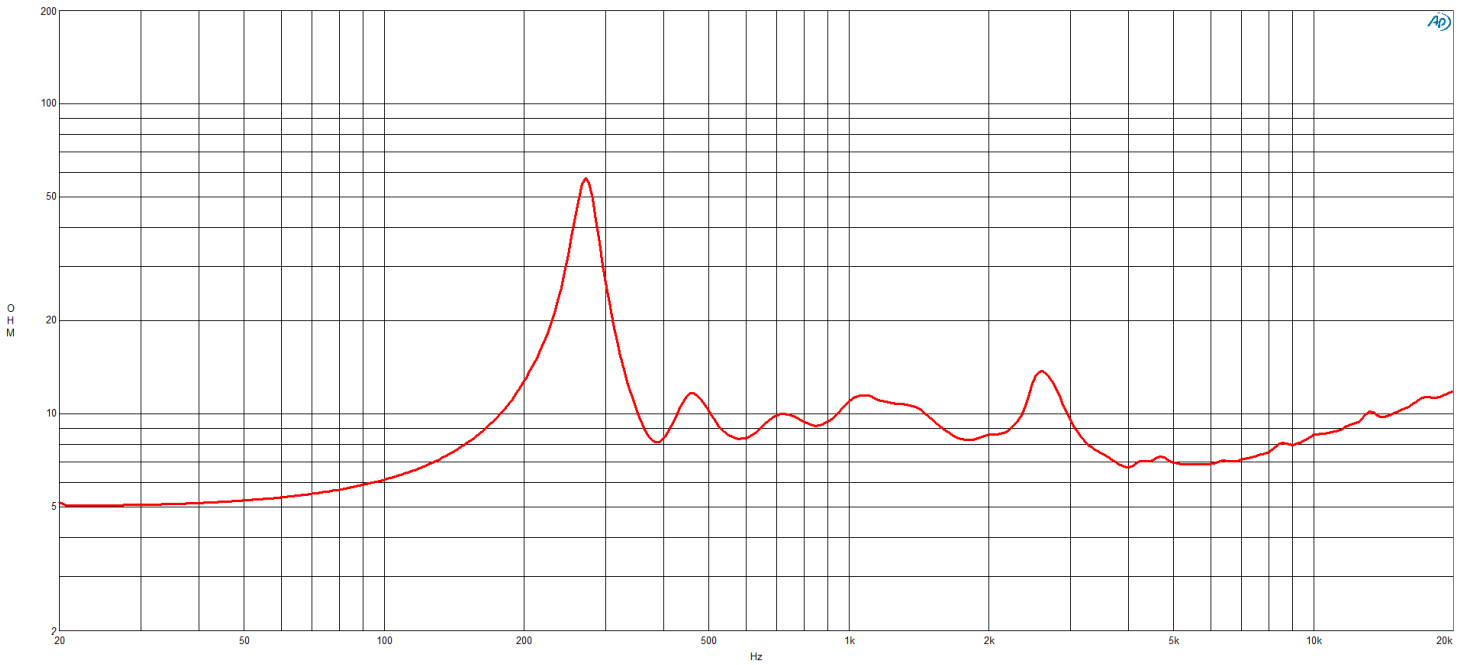
200
100
50
20
10
5
2
OHM
20
50
100
200
500
1k
2k
5k
10k
20k
Hz

# DCM420 8 Ω

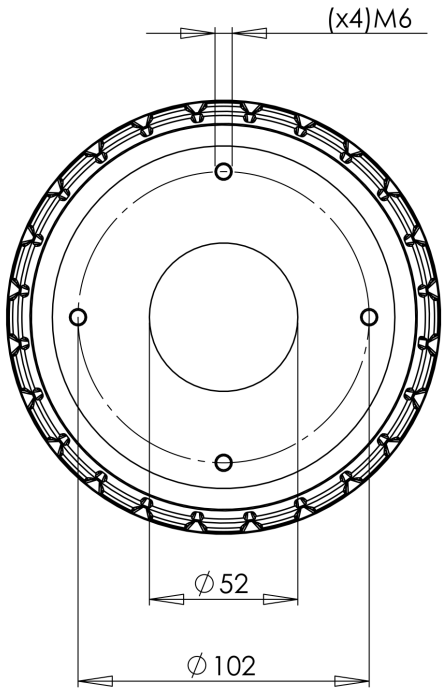


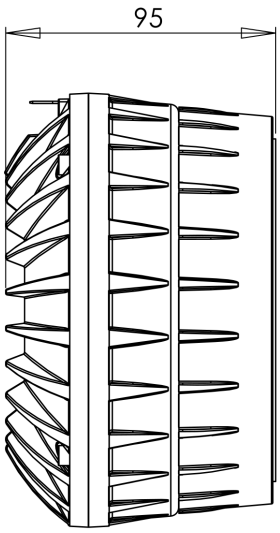


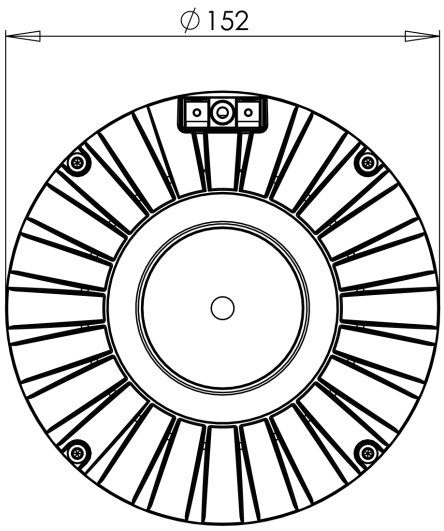



**B&C Speakers S.p.A.** Via Poggiomoro, 1 - Loc. Vallina, 50012 Bagno a Ripoli (FI) | ITALY
Tel. +39 055 65721 | Fax +39 055 6572312 | mail@bcspeakers.com