14NDL88 8 Ω

Woofer

- 1400 W continuous program power capacity
- 88 mm (3.5 in) aluminium voice coil
- 45 - 3000 Hz response
- 99 dB sensitivity
- Ventilated voice coil gap for reduced power compression
- Aluminium demodulating ring allows a very low distortion figure
- Double silicone spider for optimized compliance

The NDL88 series is perfectly balanced for the loudspeaker systems of today. Incorporating a high temperature neodymium magnet inside the 3.5” (88mm) voice coil reduces the amount of steel needed in the motor structure, saving cost and weight. Unexpected low frequency output and midrange extension to meet with almost any driver for two way applications is the hallmark of this new performance-oriented woofer line from B&C Speakers. Do more, with less, with the NDL88 series.





B&C Speakers S.p.A. Via Poggiomoro, 1 - Loc. Vallina, 50012 Bagno a Ripoli (FI) | ITALY
Tel. +39 055 65721 | Fax +39 055 6572312 | mail@bcspeakers.com

14NDL88 8 Ω

Woofer

SPECIFICATIONS

Nominal Diameter	**359 mm (14 in)**
Nominal Impedance	**8 Ω**
Minimum Impedance	**6.5 Ω**
Nominal Power Handling 2 hours test made with continuous pink noise signal within the range Fs-10Fs. Power calculated on rated minumum impedance. Loudspeaker in free air.	**700 W**
Continuous Power Handling Power on Continuous Program is defined as 3 dB greater than the Nominal rating.	**1400 W**
Sensitivity Applied RMS Voltage is set to 2.83 V for 8 ohms Nominal Impedance.	**99 dB**
Frequency Range	**45 Hz - 3000 Hz**
Voice Coil Diameter	**88 mm (3.5 in)**
Winding Material	**Aluminium**
Former Material	**Glass Fibre**
Winding Depth	**21 mm (0.85 in)**
Magnetic Gap Depth	**10 mm (0.4 in)**
Flux Density	**1.05 T**
Woofer Cone Treatment	**WP Waterproof Front Side**

PARAMETERS

Thiele-Small parameters are measured after a high level 20 Hz sine wave preconditioning test.

Fs	**45 Hz**
Re	**5 Ω**
Qes	**0.31**
Qms	**7.8**
Qts	**0.3**
Vas	**102 dm³ (3.6 ft³)**
Sd	**707 cm² (109.6 in²)**
η0	**2.9 %**
Xmax	**8 mm**
Xvar	**9.5 mm**
Mms	**86 g**
Bl	**19.9 Tm**
Le	**1.2 mH**
EBP	**145 Hz**

DESIGN

Surround Shape	**Triple Roll**
Cone Shape	**Exponential**
Magnet Material	**Neodymium Inside Slug**
Spider	**Double Silicone**
Pole Design	**T-Pole**
Woofer Cone Treatment	**WP Waterproof Front Side**
Recommended Enclosure	**75 dm³ (2.65 ft³)**
Recommended Tuning	**53 Hz**

MOUNTING AND SHIPPING INFO

Overall Diameter	**359 mm (14.1 in)**
Bolt Circle Diameter	**343 mm (13.5 in)**
Baffle Cutout Diameter	**323 mm (12.72 in)**
Depth	**167 mm (6.57 in)**
Flange and Gasket Thickness	**12 mm (0.47 in)**
Air Volume Occupied by Driver	**3.5 dm³ (0.12 ft³)**
Net Weight	**5.3 kg (11.68 lb)**
Shipping Units	**1 pcs**
Shipping Weight	**6.6 kg (14.55 lb)**
Shipping Box	**425x425x224 mm (16.73x16.73x8.82 in)**

SERVICE KITS

LF recone-kits	**RCK14NDL888**

B&C Speakers S.p.A. Via Poggiomoro, 1 - Loc. Vallina, 50012 Bagno a Ripoli (FI) | ITALY
Tel. +39 055 65721 | Fax +39 055 6572312 | mail@bcspeakers.com

14NDL88 8 Ω

Woofer

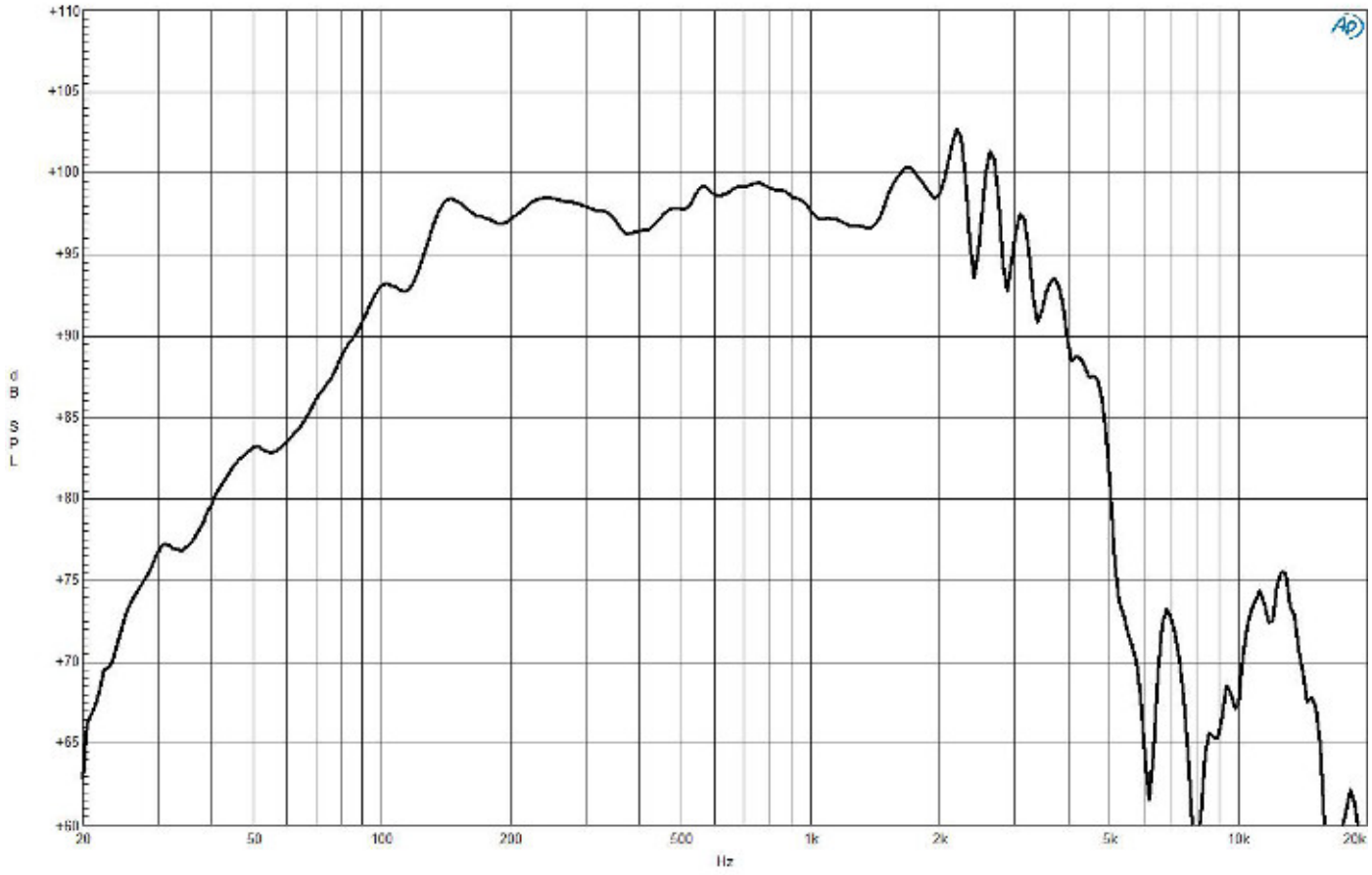

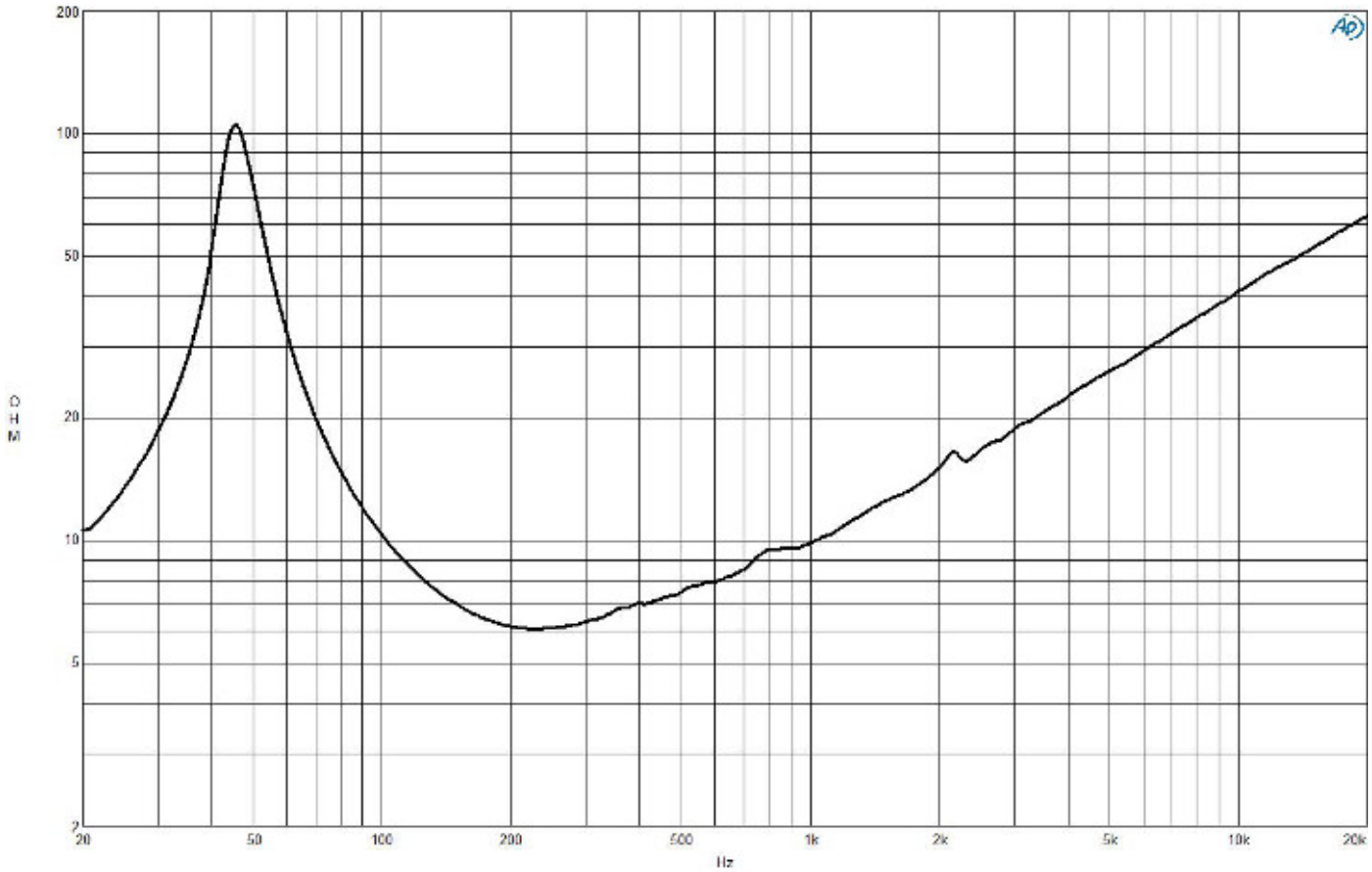

B&C SPEAKERS

Professional loudspeaker transducers since 1946

B&C Speakers S.p.A. Via Poggiomoro, 1 - Loc. Vallina, 50012 Bagno a Ripoli (FI) | ITALY
Tel. +39 055 65721 | Fax +39 055 6572312 | mail@bcspeakers.com

14NDL88 8 Ω

Woofer

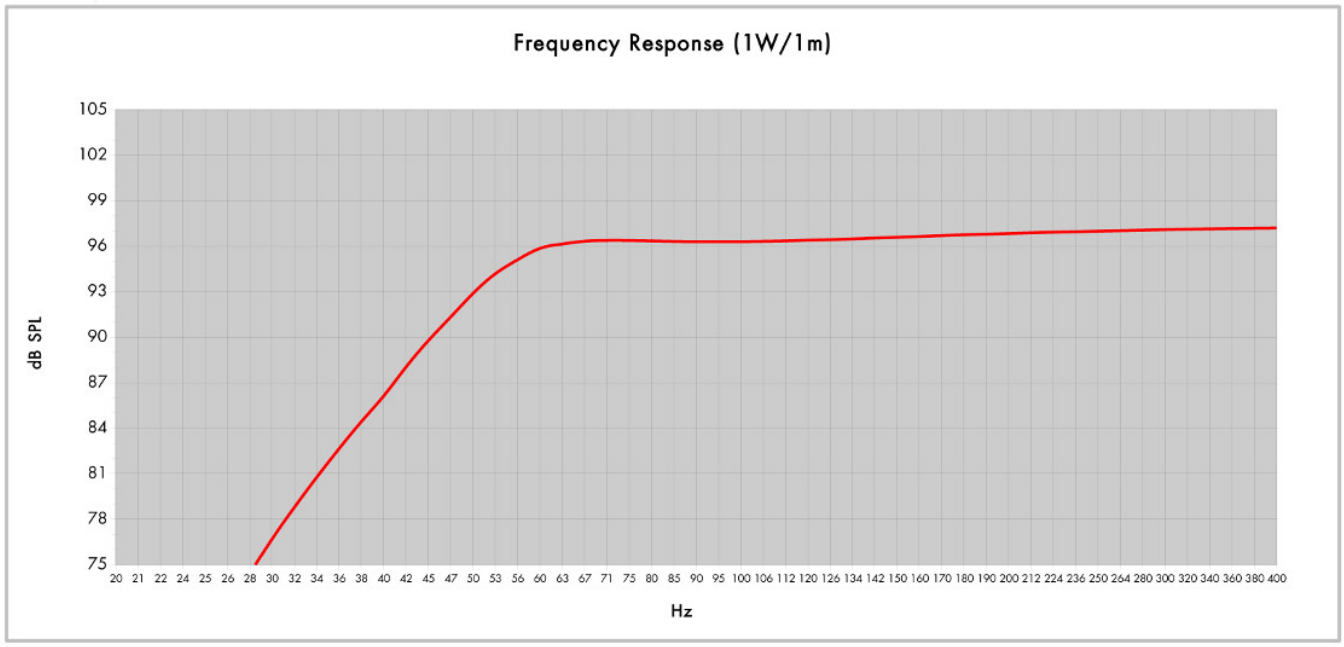

Model:	14NDL88		
Enclosure Type:	Bass Reflex	Configuration:	One Driver
Internal Net Volume (Litres):	75	QB:	6
Tuning Frequency (Hz):	53	Port Area (cm²):	222,3
Frequency (-3 dB) (Hz):	53,6	Port Length (cm):	17,0
Frequency (-10 dB) (Hz):	41,6		

B&C Speakers S.p.A. Via Poggiomoro, 1 - Loc. Vallina, 50012 Bagno a Ripoli (FI) | ITALY
Tel. +39 055 65721 | Fax +39 055 6572312 | mail@bcspeakers.com

14NDL88 8 Ω

Woofer

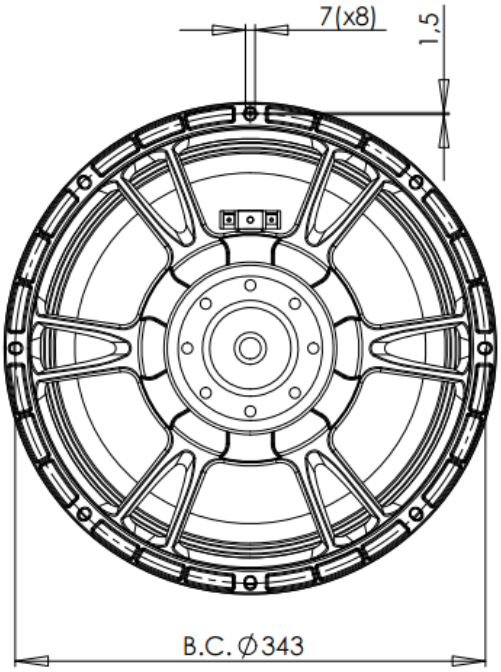

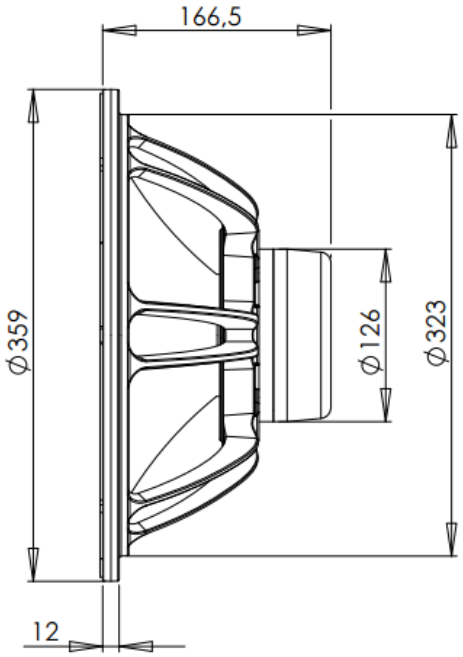

B&C Speakers S.p.A. Via Poggiomoro, 1 - Loc. Vallina, 50012 Bagno a Ripoli (FI) | ITALY
Tel. +39 055 65721 | Fax +39 055 6572312 | mail@bcspeakers.com