15CLA76 8 Ω

Woofer

- 700 W continuous program power capacity
- 76 mm (3 in) aluminium voice coil
- 40 - 3000 Hz response
- 99 dB sensitivity
- Ventilated voice coil gap for reduced power compression
- Aluminium demodulating ring for very low distortion

Careful optimization of our lightest woofer series, now offered with a high temperature copper-clad aluminum voice coil, is rewarded with higher sensitivity and smoother high frequency response. An efficiently designed motor makes these a good fit for many more applications, especially where flown, and manufacturing design means the CLA series can be price competitive with ferrite motor designs offering similar performance.





B&C Speakers S.p.A. Via Poggiomoro, 1 - Loc. Vallina, 50012 Bagno a Ripoli (FI) | ITALY
Tel. +39 055 65721 | Fax +39 055 6572312 | mail@bcspeakers.com

15CLA76 8 Ω

Woofer

SPECIFICATIONS

Nominal Diameter	**380 mm (15 in)**
Nominal Impedance	**8 Ω**
Minimum Impedance	**6 Ω**
Nominal Power Handling 2 hours test made with continuous pink noise signal within the range Fs-10Fs. Power calculated on rated minumum impedance. Loudspeaker in free air.	**350 W**
Continuous Power Handling Power on Continuous Program is defined as 3 dB greater than the Nominal rating.	**700 W**
Sensitivity Applied RMS Voltage is set to 2.83 V for 8 ohms Nominal Impedance.	**99 dB**
Frequency Range	**40 Hz - 3000 Hz**
Voice Coil Diameter	**76 mm (3 in)**
Winding Material	**Aluminium**
Former Material	**Glass Fibre**
Winding Depth	**16 mm (0.63 in)**
Magnetic Gap Depth	**11 mm (0.43 in)**
Flux Density	**1.2 T**
Woofer Cone Treatment	**WP Waterproof Front Side**

PARAMETERS

Thiele-Small parameters are measured after a high level 20 Hz sine wave preconditioning test.

Fs	**40 Hz**
Re	**5.2 Ω**
Qes	**0.31**
Qms	**6.9**
Qts	**0.3**
Vas	**176 dm³ (6.22 ft³)**
Sd	**855 cm² (132.53 in²)**
η0	**3.5 %**
Xmax	**5.5 mm**
Xvar	**7.5 mm**
Mms	**93 g**
Bl	**19.8 Tm**
Le	**0.5 mH**
EBP	**129 Hz**

DESIGN

Surround Shape	**Triple Roll**
Cone Shape	**Exponential**
Magnet Material	**Neodymium Inside Slug**
Spider	**Single**
Pole Design	**Straight Pole**
Woofer Cone Treatment	**WP Waterproof Front Side**
Recommended Enclosure	**100 dm³ (3.53 ft³)**
Recommended Tuning	**50 Hz**

MOUNTING AND SHIPPING INFO

Overall Diameter	**388 mm (15.28 in)**
Bolt Circle Diameter	**374 mm (14.72 in)**
Baffle Cutout Diameter	**353 mm (13.9 in)**
Depth	**171 mm (6.73 in)**
Flange and Gasket Thickness	**10 mm (0.39 in)**
Air Volume Occupied by Driver	**4.4 dm³ (0.16 ft³)**
Net Weight	**3.8 kg (8.38 lb)**
Shipping Units	**1 pcs**
Shipping Weight	**5.1 kg (11.24 lb)**
Shipping Box	**425x425x224 mm (16.73x16.73x8.82 in)**

SERVICE KITS

LF recone-kits	**RCK15CLA768**

B&C Speakers S.p.A. Via Poggiomoro, 1 - Loc. Vallina, 50012 Bagno a Ripoli (FI) | ITALY
Tel. +39 055 65721 | Fax +39 055 6572312 | mail@bcspeakers.com

15CLA76 8 Ω

Woofer

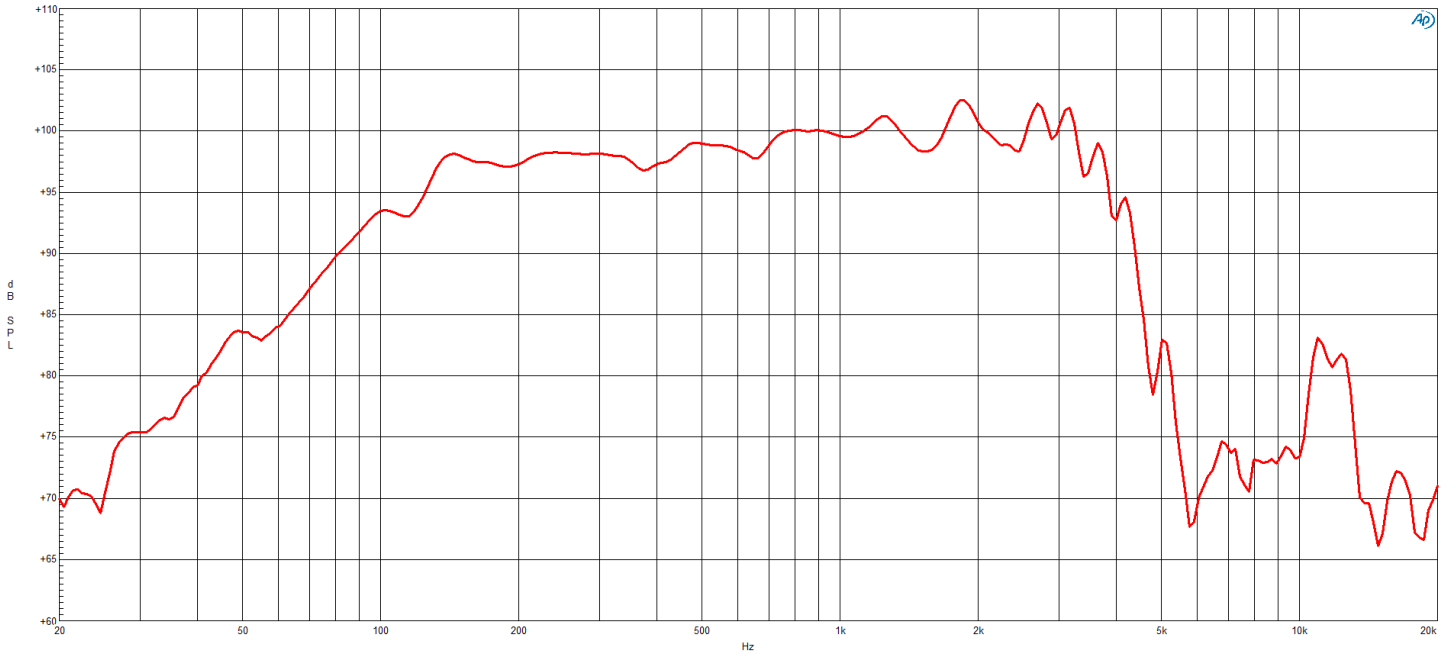

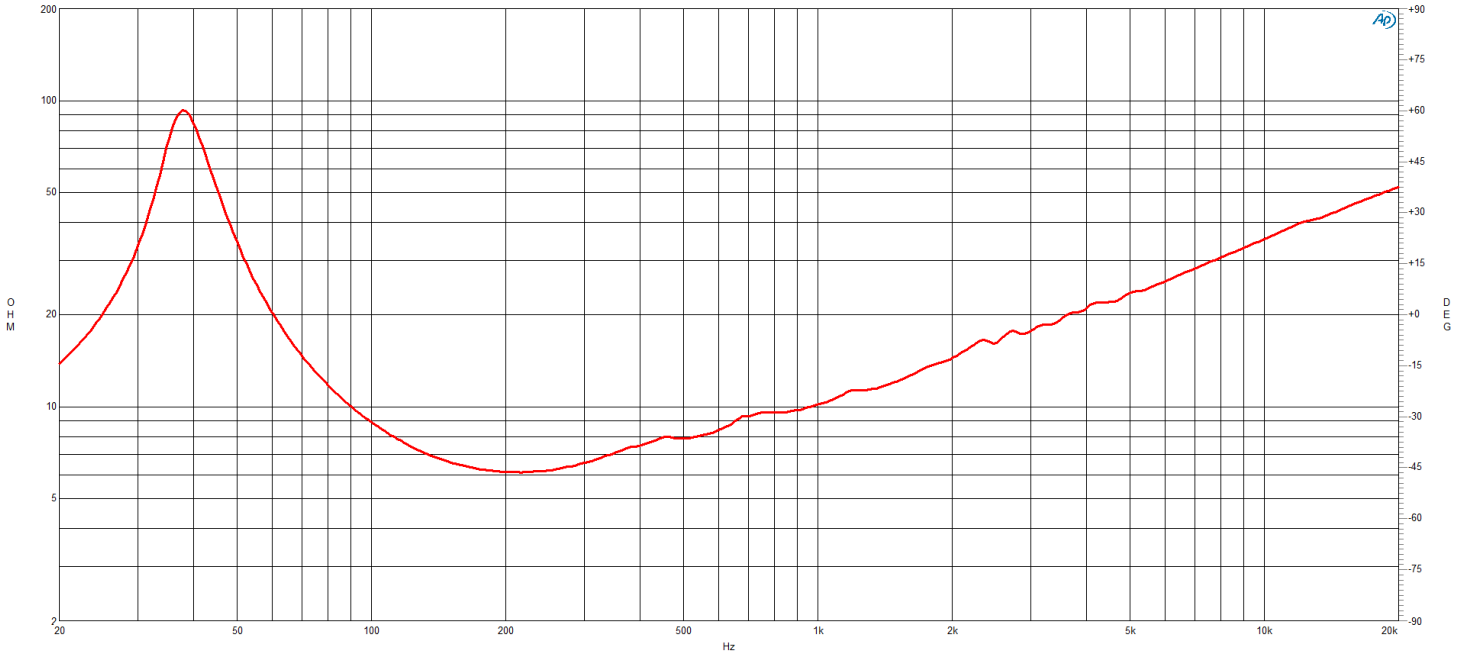

15CLA76 8 Ω

Woofer

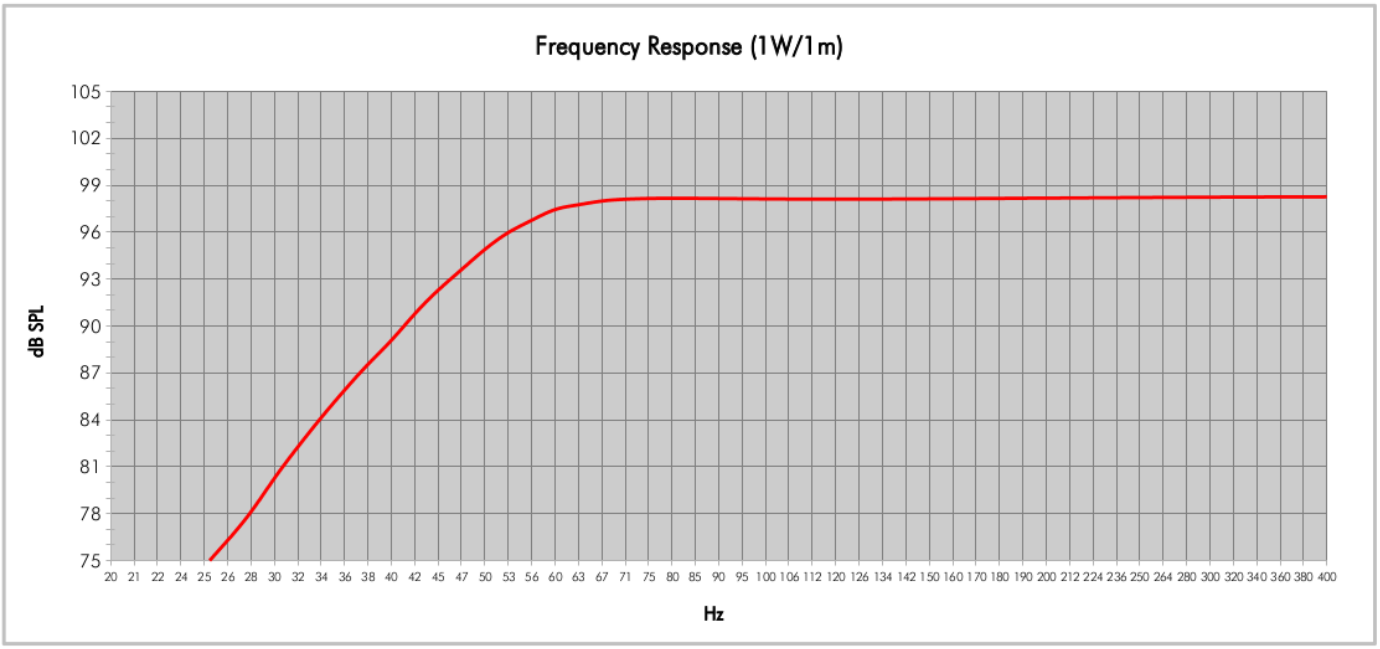

Model:	**15CLA76**		
Enclosure Type:	**Bass Reflex**	Configuration:	**One Driver**
Internal Net Volume (Litres):	**100**	QB:	**7**
Tuning Frequency (Hz):	**50**	Port Area (cm²):	**140,0**
Frequency (-3 dB) (Hz):	**51,1**	Port Length (cm):	**5,1**
Frequency (-10 dB) (Hz):	**39,0**		

B&C Speakers S.p.A. Via Poggiomoro, 1 - Loc. Vallina, 50012 Bagno a Ripoli (FI) | ITALY
Tel. +39 055 65721 | Fax +39 055 6572312 | mail@bcspeakers.com

15CLA76 8 Ω

Woofer

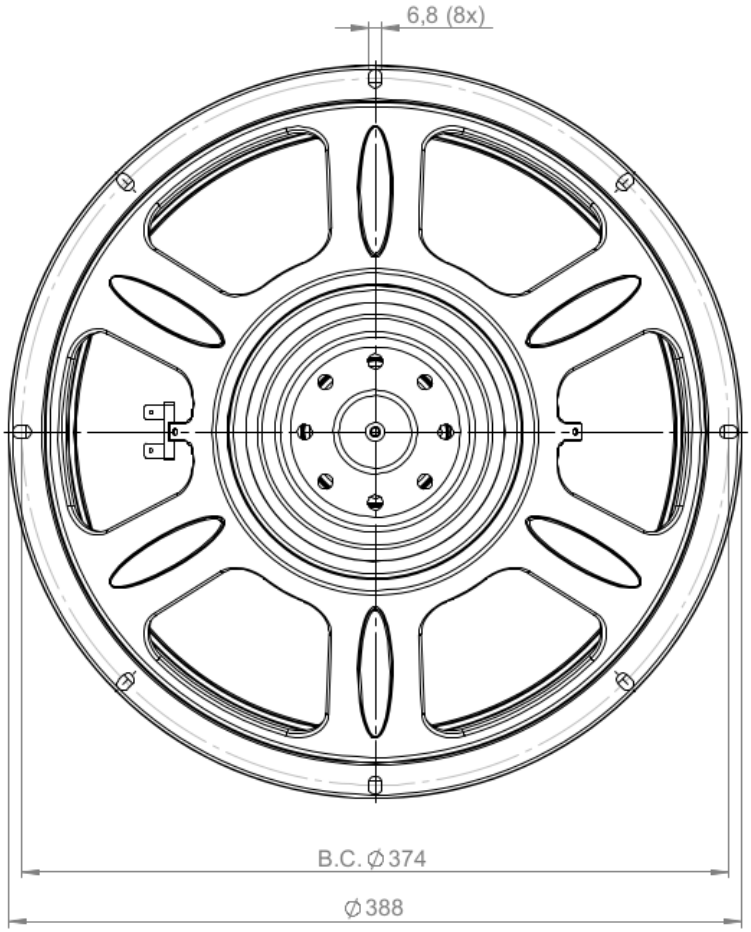

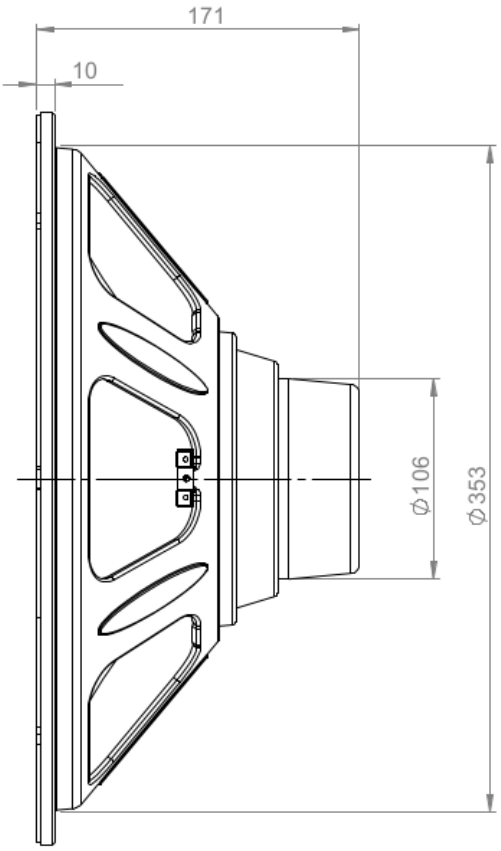

B&C Speakers S.p.A. Via Poggiomoro, 1 - Loc. Vallina, 50012 Bagno a Ripoli (FI) | ITALY
Tel. +39 055 65721 | Fax +39 055 6572312 | mail@bcspeakers.com