15NW100 8 Ω

Subwoofer

- 2000 W continuous program power capacity
- 100 mm (4 in) copper voice coil
- 35 - 1500 Hz response
- 97 dB sensitivity
- FEA optimized Neodymium magnet assembly
- Double silicone spider with optimized compliance
- Ventilated voice coil gap for reduced power compression





B&C Speakers S.p.A. Via Poggiomoro, 1 - Loc. Vallina, 50012 Bagno a Ripoli (FI) | ITALY
Tel. +39 055 65721 | Fax +39 055 6572312 | mail@bcspeakers.com

15NW100 8 Ω

Subwoofer

SPECIFICATIONS

Nominal Diameter	**380 mm (15 in)**
Nominal Impedance	**8 Ω**
Minimum Impedance	**6.2 Ω**
Nominal Power Handling 2 hours test made with continuous pink noise signal within the range Fs-10Fs. Power calculated on rated minumum impedance. Loudspeaker in free air.	**1000 W**
Continuous Power Handling Power on Continuous Program is defined as 3 dB greater than the Nominal rating.	**2000 W**
Sensitivity Applied RMS Voltage is set to 2.83 V for 8 ohms Nominal Impedance.	**97 dB**
Frequency Range	**35 Hz - 1500 Hz**
Voice Coil Diameter	**100 mm (4 in)**
Winding Material	**Copper**
Former Material	**Glass Fibre**
Winding Depth	**25 mm (1 in)**
Magnetic Gap Depth	**12 mm (0.5 in)**
Flux Density	**1.2 T**
Woofer Cone Treatment	**TWP Waterproof Both Sides**

PARAMETERS

Thiele-Small parameters are measured after a high level 20 Hz sine wave preconditioning test.

Fs	**33 Hz**
Re	**5.1 Ω**
Qes	**0.23**
Qms	**4.3**
Qts	**0.22**
Vas	**139 dm³ (4.9 ft³)**
Sd	**855 cm² (132.5 in²)**
η0	**2.1 %**
Xmax	**9 mm**
Xvar	**11 mm**
Mms	**173 g**
Bl	**28 Tm**
Le	**1.9 mH**
EBP	**143 Hz**

DESIGN

Surround Shape	**Triple Roll**
Cone Shape	**Radial**
Magnet Material	**Neodymium Inside Slug**
Spider	**Double Silicone**
Pole Design	**T-Pole**
Woofer Cone Treatment	**TWP Waterproof Both Sides**
Recommended Enclosure	**100 dm³ (3.53 ft³)**
Recommended Tuning	**40 Hz**

MOUNTING AND SHIPPING INFO

Overall Diameter	**393 mm (15.5 in)**
Bolt Circle Diameter	**374 mm (14.7 in)**
Baffle Cutout Diameter	**354 mm (13.9 in)**
Depth	**181 mm (7.1 in)**
Flange and Gasket Thickness	**16 mm (0.62 in)**
Air Volume Occupied by Driver	**6 dm³ (0.21 ft³)**
Net Weight	**8.65 kg (19.07 lb)**
Shipping Units	**1 pcs**
Shipping Weight	**9.95 kg (21.94 lb)**
Shipping Box	**425x425x224 mm (16.73x16.73x8.82 in)**

SERVICE KITS

LF recone-kits	**RCK15NW1008**

B&C Speakers S.p.A. Via Poggiomoro, 1 - Loc. Vallina, 50012 Bagno a Ripoli (FI) | ITALY
Tel. +39 055 65721 | Fax +39 055 6572312 | mail@bcspeakers.com

15NW100 8 Ω

Subwoofer

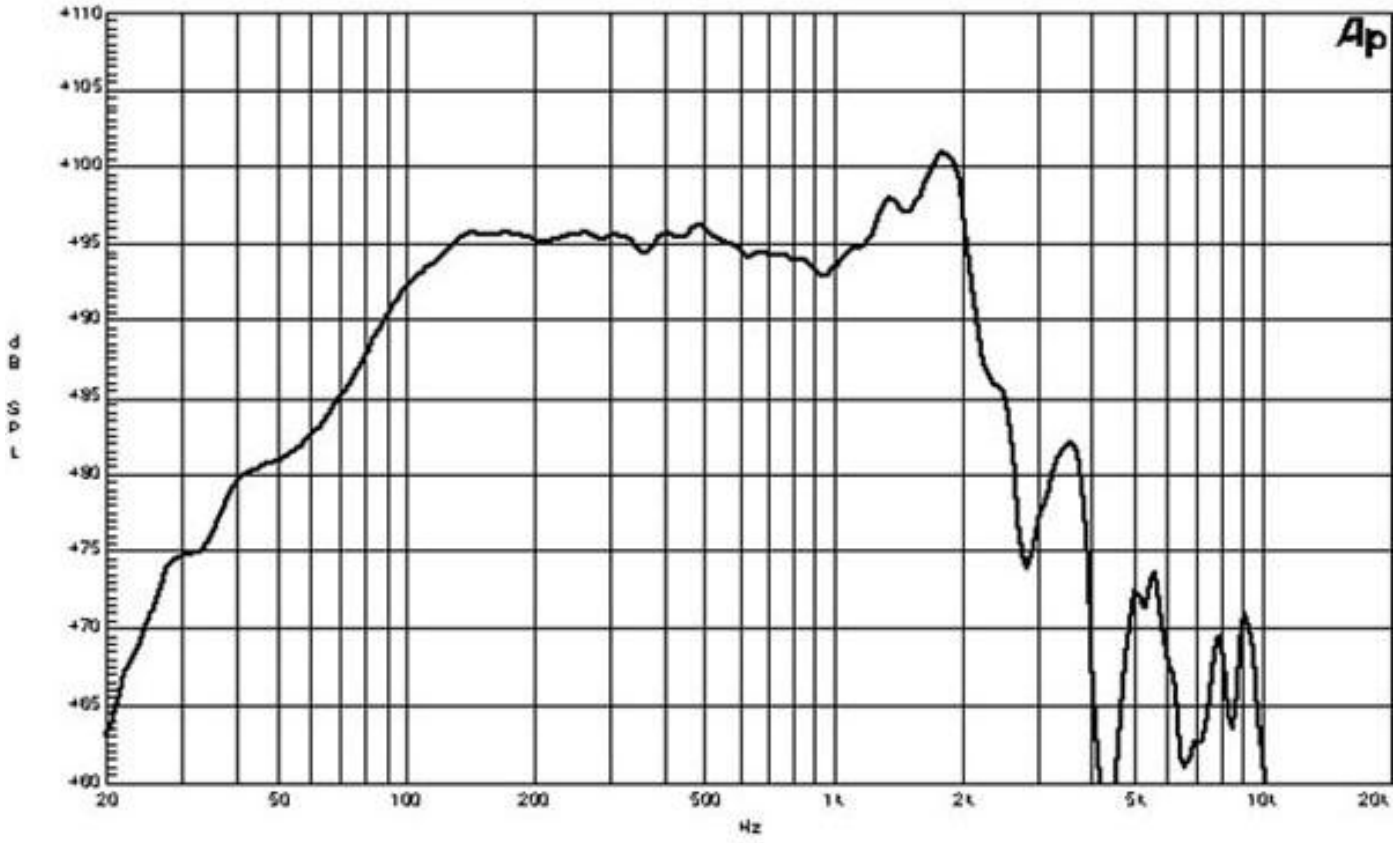

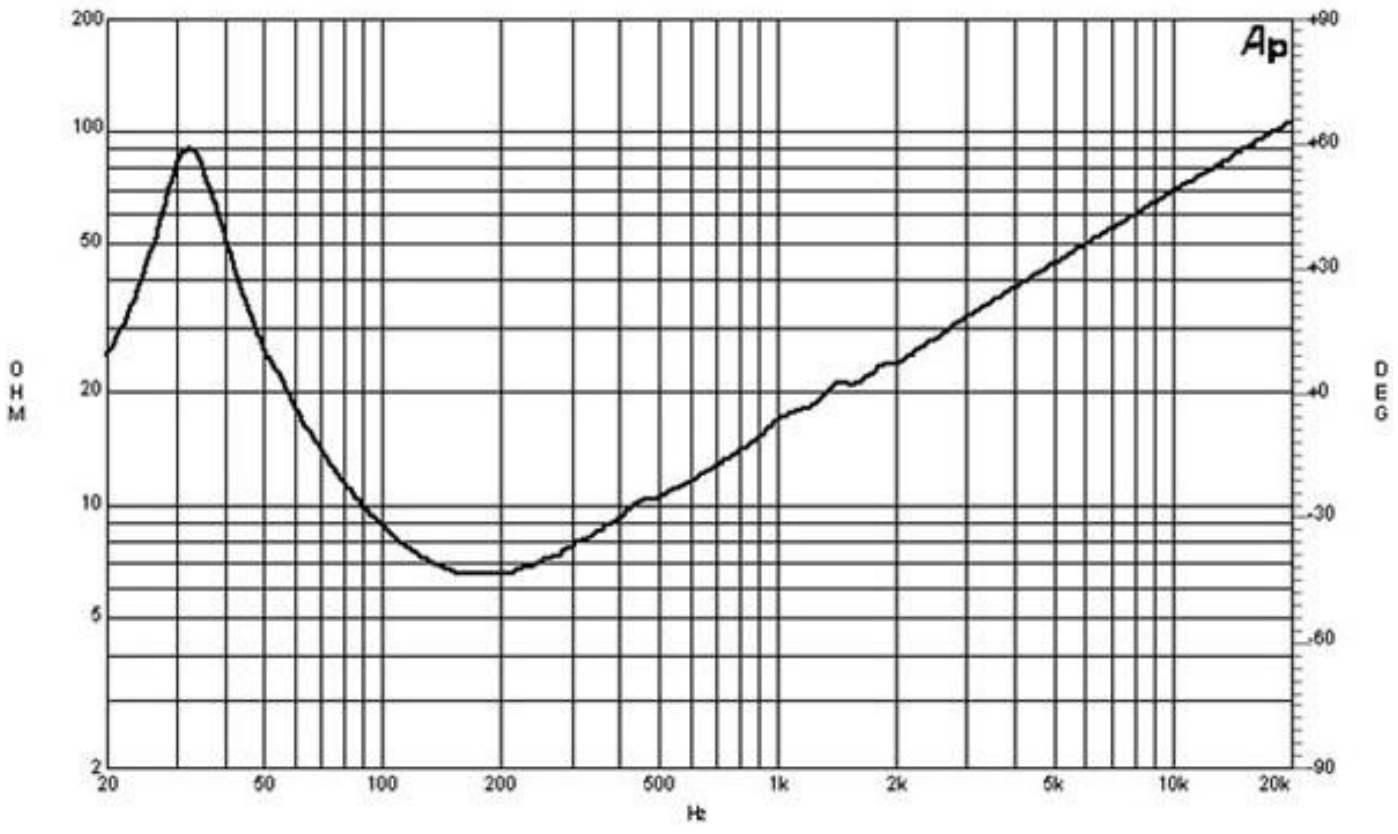

B&C Speakers S.p.A. Via Poggiomoro, 1 - Loc. Vallina, 50012 Bagno a Ripoli (FI) | ITALY
Tel. +39 055 65721 | Fax +39 055 6572312 | mail@bcspeakers.com

15NW100 8 Ω

Subwoofer

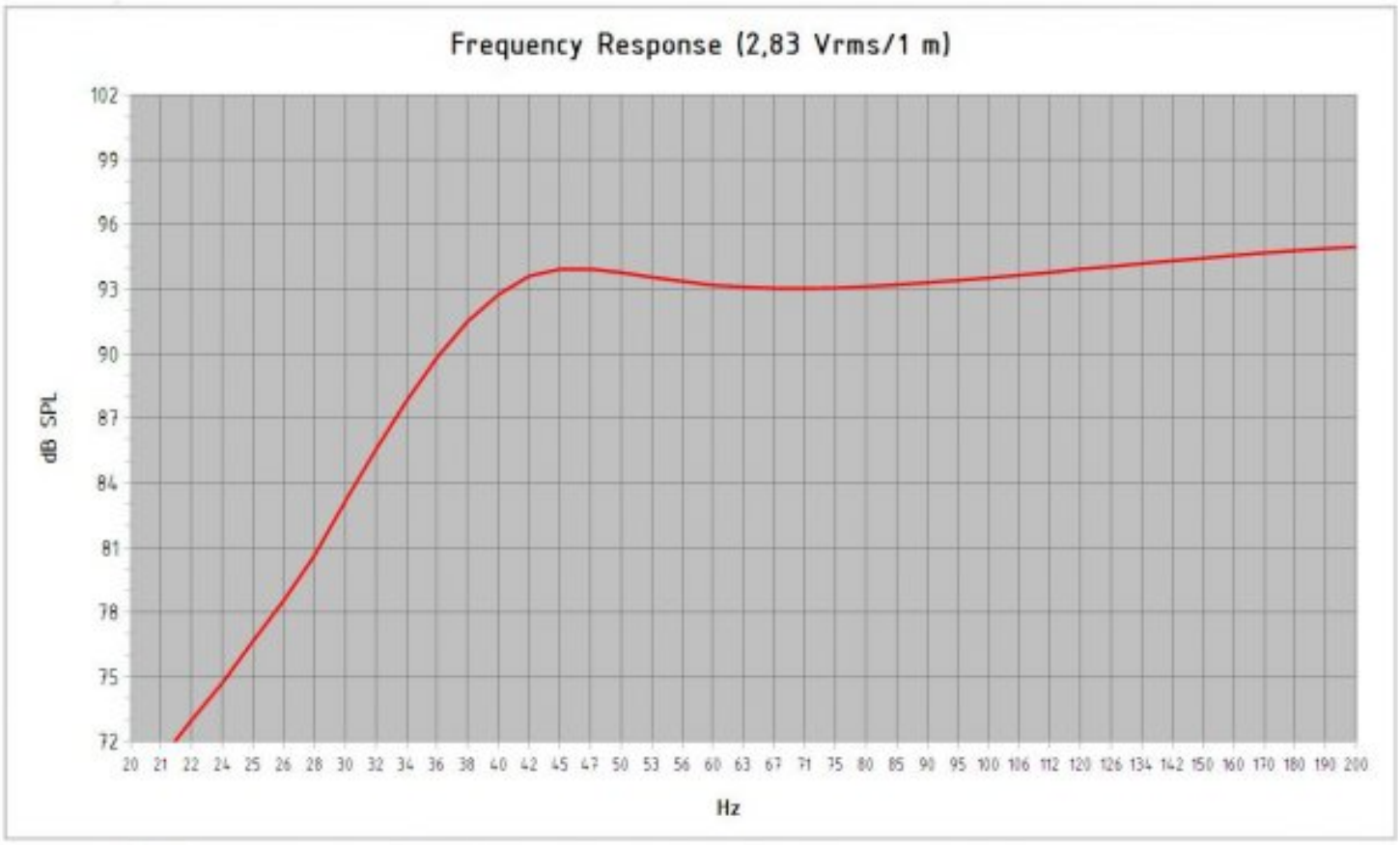

Model:	***15 NW 100***		
Enclosure Type:	***Bass Reflex***		
Internal Net Volume (Liters):	***100***		
Tuning Frequency (Hz):	***40***	*Port Area (cm²):*	***222,3***
Frequency (-3 dB) (Hz):	***40,5***	*Port Length (cm):*	***27,1***

Excursion Limited Maximum SPL at 1 meter (dB):	***121,0***	*equal to*	***414,8*** *Watts*	*(Bass Band Power Rating)*
Thermal Limited Maximum SPL at 1 meter (dB):	***124,8***	*equal to*	***1000,0*** *Watts*	*(Mid Band Power Rating)*

B&C Speakers S.p.A. Via Poggiomoro, 1 - Loc. Vallina, 50012 Bagno a Ripoli (FI) | ITALY
Tel. +39 055 65721 | Fax +39 055 6572312 | mail@bcspeakers.com

15NW100 8 Ω

Subwoofer

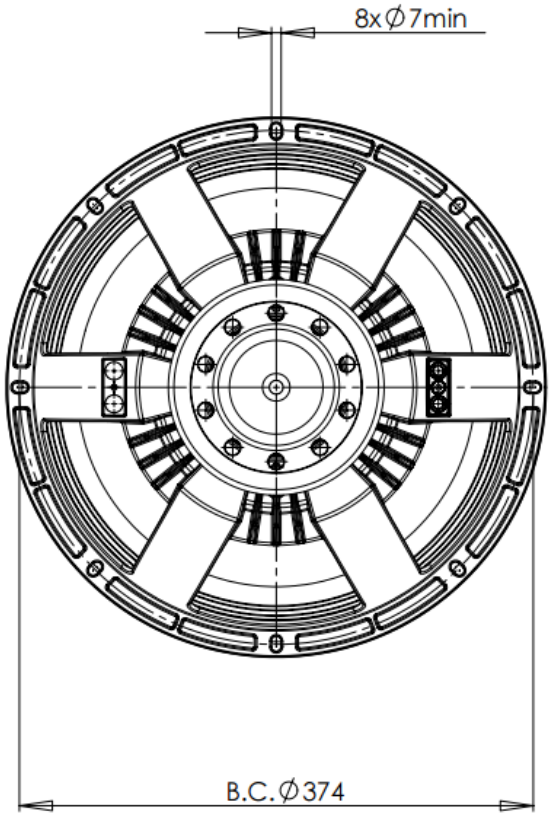

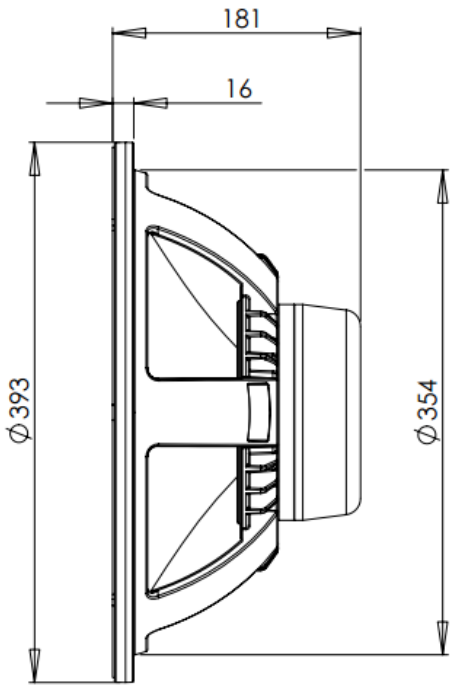

B&C Speakers S.p.A. Via Poggiomoro, 1 - Loc. Vallina, 50012 Bagno a Ripoli (FI) | ITALY
Tel. +39 055 65721 | Fax +39 055 6572312 | mail@bcspeakers.com