15PZB100 8 Ω

Subwoofer

- 1400 W continuous program power capacity
- 100 mm (4 in) copper voice coil
- 40- 2000 Hz response
- 97 dB sensitivity
- Double silicone spider with optimized compliance





B&C Speakers S.p.A. Via Poggiomoro, 1 - Loc. Vallina, 50012 Bagno a Ripoli (FI) | ITALY
Tel. +39 055 65721 | Fax +39 055 6572312 | mail@bcspeakers.com

15PZB100 8 Ω

Subwoofer

SPECIFICATIONS

Nominal Diameter	**380 mm (15 in)**
Nominal Impedance	**8 Ω**
Minimum Impedance	**6.4 Ω**
Nominal Power Handling 2 hours test made with continuous pink noise signal within the range Fs-10Fs. Power calculated on rated minumum impedance. Loudspeaker in free air.	**700 W**
Continuous Power Handling Power on Continuous Program is defined as 3 dB greater than the Nominal rating.	**1400 W**
Sensitivity Applied RMS Voltage is set to 2.83 V for 8 ohms Nominal Impedance.	**97 dB**
Frequency Range	**40 Hz - 2000 Hz**
Voice Coil Diameter	**100 mm (4 in)**
Winding Material	**Copper**
Former Material	**Glass Fibre**
Winding Depth	**21 mm (0.83 in)**
Magnetic Gap Depth	**9 mm (0.35 in)**
Flux Density	**1.15 T**
Woofer Cone Treatment	**TWP Waterproof Both Sides**

PARAMETERS

Thiele-Small parameters are measured after a high level 20 Hz sine wave preconditioning test.

Fs	**39 Hz**
Re	**5.2 Ω**
Qes	**0.3**
Qms	**6.5**
Qts	**0.29**
Vas	**110 dm³ (3.8 ft³)**
Sd	**855 cm² (132.5 in²)**
η0	**2.1 %**
Xmax	**8 mm**
Xvar	**6.5 mm**
Mms	**154 g**
Bl	**25.8 Tm**
Le	**2 mH**
EBP	**130 Hz**

DESIGN

Surround Shape	**Double Roll**
Cone Shape	**Exponential**
Magnet Material	**Ferrite**
Spider	**Double Silicone**
Pole Design	**Straight Pole**
Woofer Cone Treatment	**TWP Waterproof Both Sides**
Recommended Enclosure	**105 dm³ (3.7 ft³)**
Recommended Tuning	**39 Hz**

MOUNTING AND SHIPPING INFO

Overall Diameter	**393 mm (15.5 in)**
Bolt Circle Diameter	**374 mm (14.7 in)**
Baffle Cutout Diameter	**354 mm (13.9 in)**
Depth	**174 mm (6.85 in)**
Flange and Gasket Thickness	**16 mm (0.63 in)**
Air Volume Occupied by Driver	**5.2 dm³ (0.18 ft³)**
Net Weight	**11.6 kg (25.57 lb)**
Shipping Units	**1 pcs**
Shipping Weight	**12.9 kg (28.44 lb)**
Shipping Box	**425x425x224 mm (16.73x16.73x8.82 in)**

SERVICE KITS

LF recone-kits	**RCK15PZB1008**

B&C Speakers S.p.A. Via Poggiomoro, 1 - Loc. Vallina, 50012 Bagno a Ripoli (FI) | ITALY
Tel. +39 055 65721 | Fax +39 055 6572312 | mail@bcspeakers.com

15PZB100 8 Ω

Subwoofer

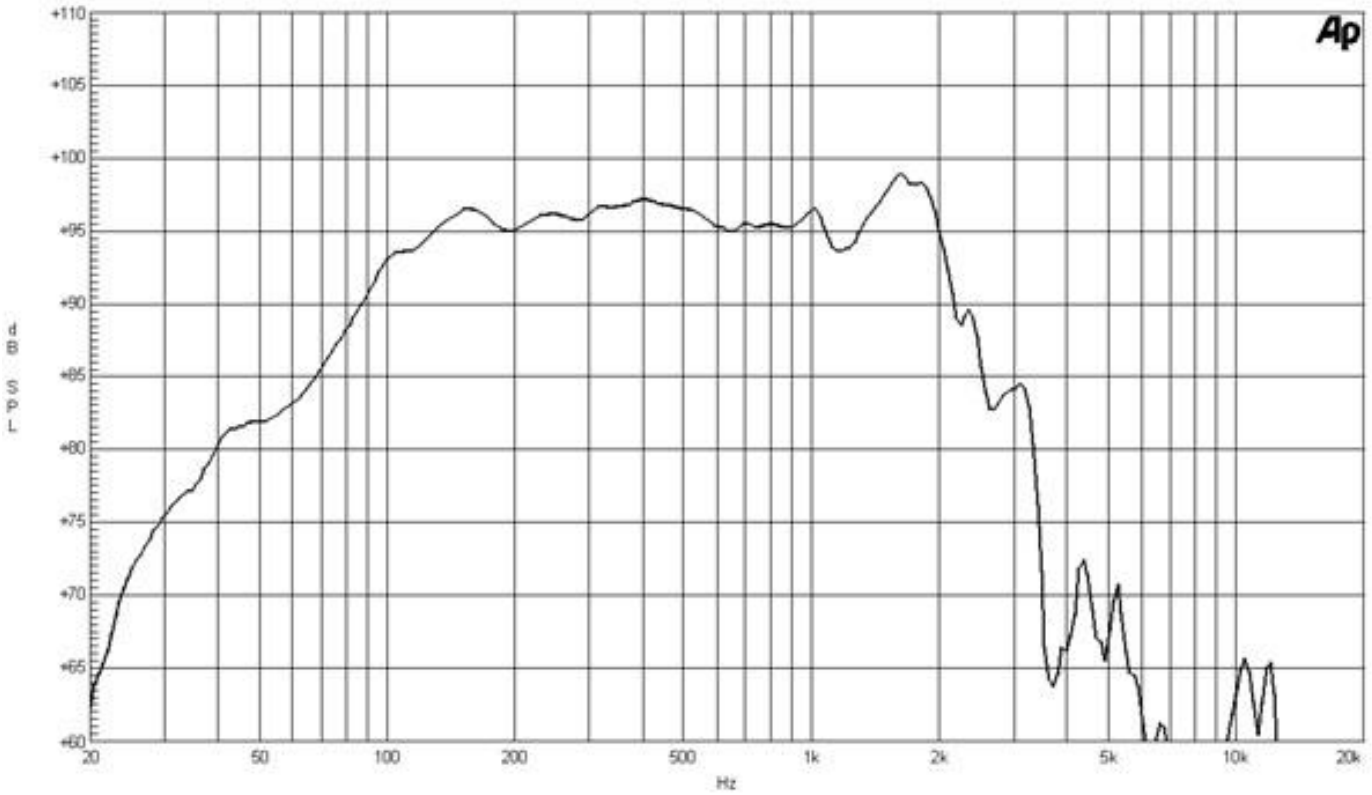

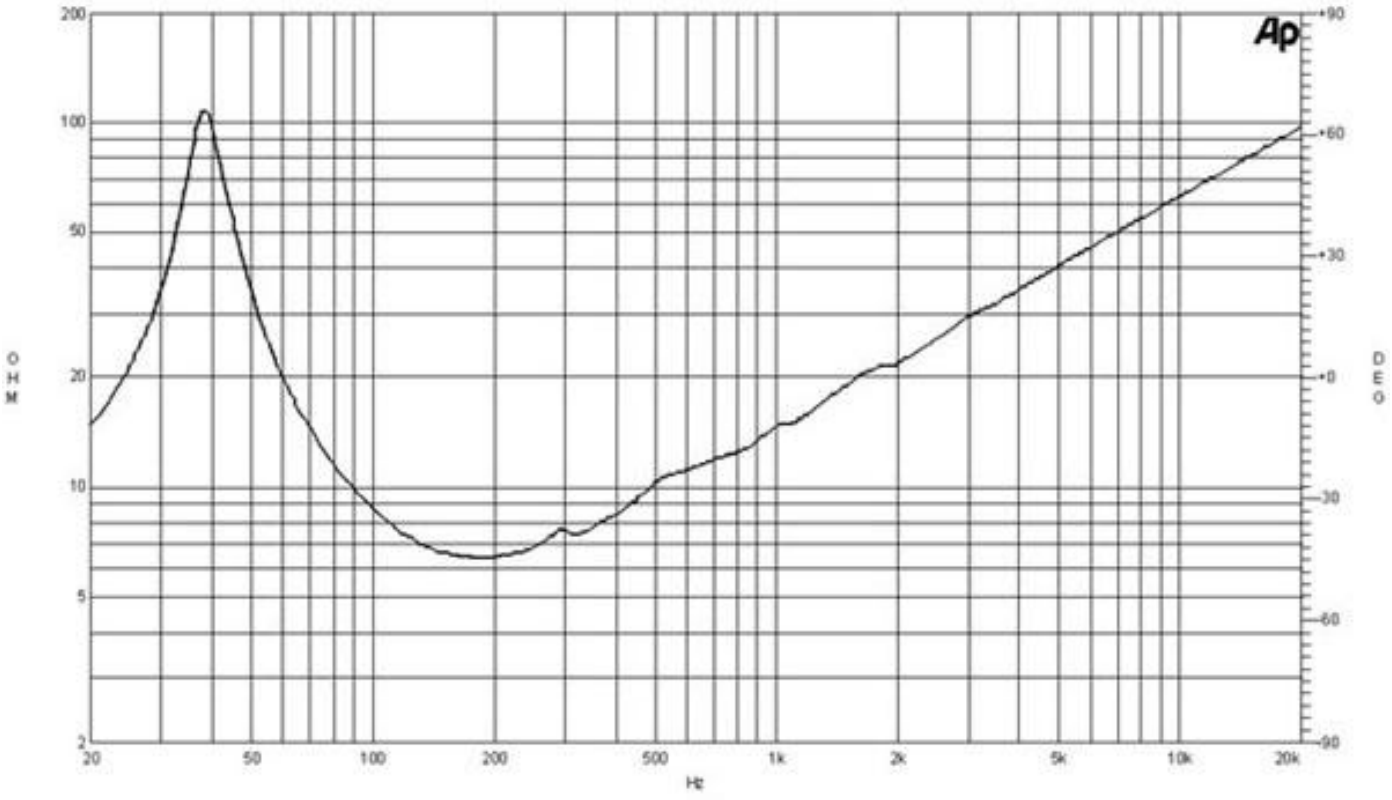

B&C Speakers S.p.A. Via Poggiomoro, 1 - Loc. Vallina, 50012 Bagno a Ripoli (FI) | ITALY
Tel. +39 055 65721 | Fax +39 055 6572312 | mail@bcspeakers.com

15PZB100 8 Ω

Subwoofer

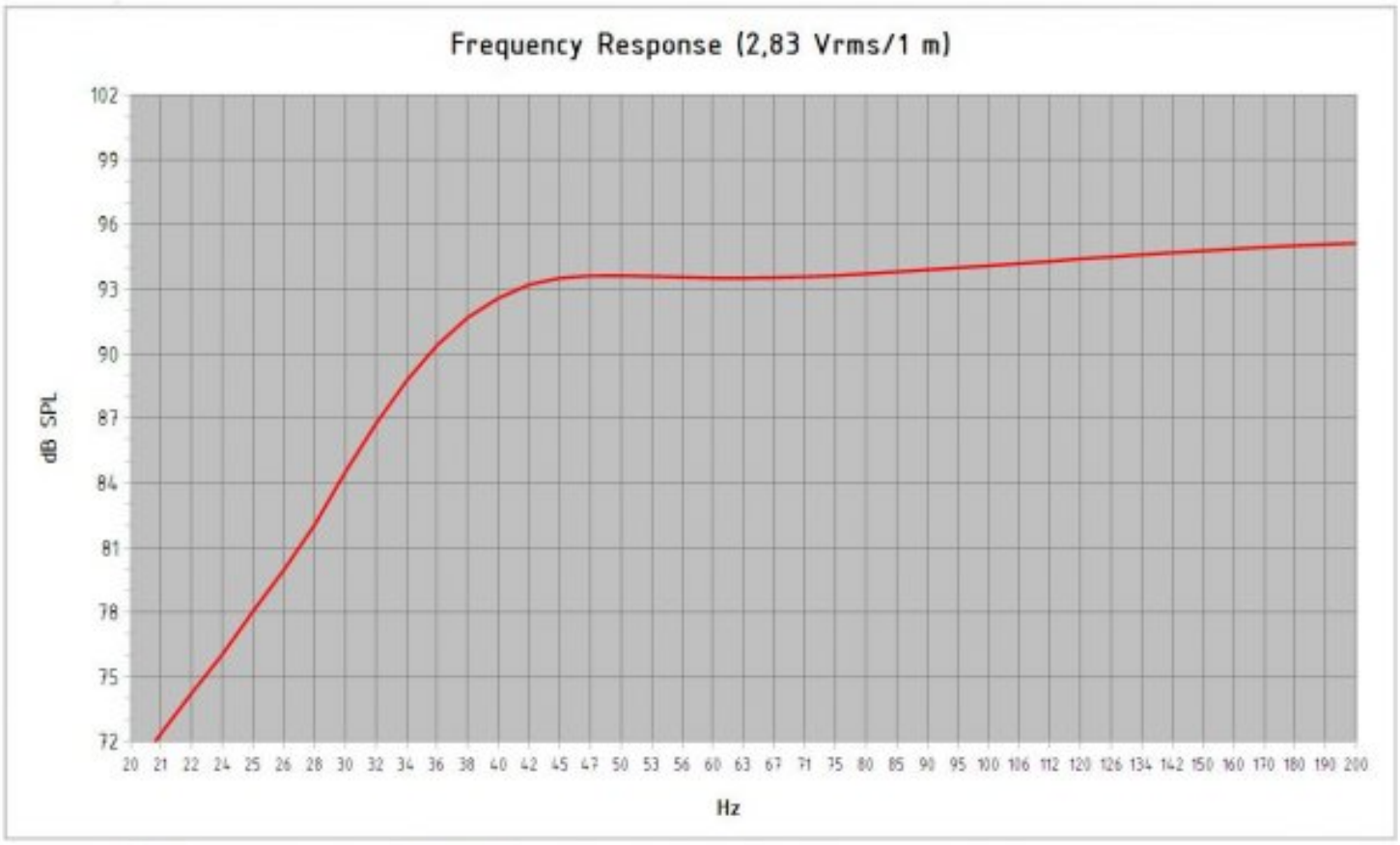

Model:	***15 PZB 100***				
Enclosure Type:	***Bass Reflex***				
Internal Net Volume (Liters):	***105***				
Tuning Frequency (Hz):	***39***	*Port Area (cm²):*	***222,3***		
Frequency (-3 dB) (Hz):	***40,5***	*Port Length (cm):*	***27,2***		
Excursion Limited Maximum SPL at 1 meter (dB):	***118,2***	*equal to*	***220,4***	*Watts*	*(Bass Band Power Rating)*
Thermal Limited Maximum SPL at 1 meter (dB):	***123,3***	*equal to*	***700,0***	*Watts*	*(Mid Band Power Rating)*

B&C Speakers S.p.A. Via Poggiomoro, 1 - Loc. Vallina, 50012 Bagno a Ripoli (FI) | ITALY
Tel. +39 055 65721 | Fax +39 055 6572312 | mail@bcspeakers.com

15PZB100 8 Ω

Subwoofer

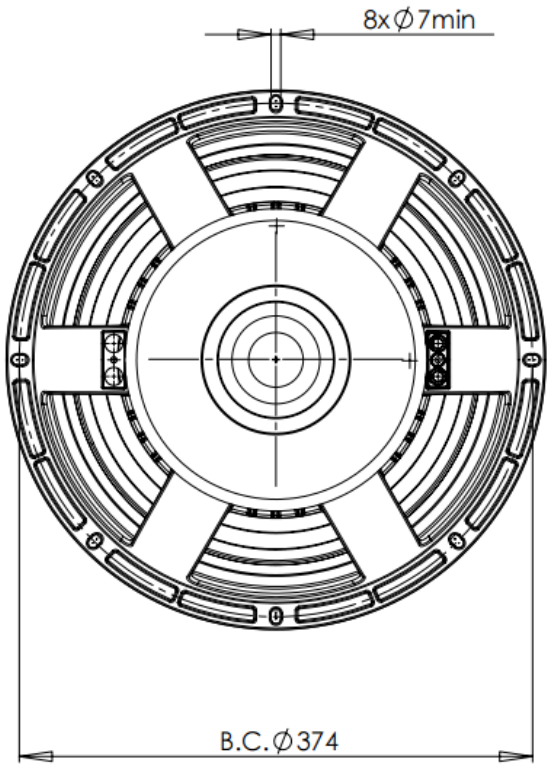

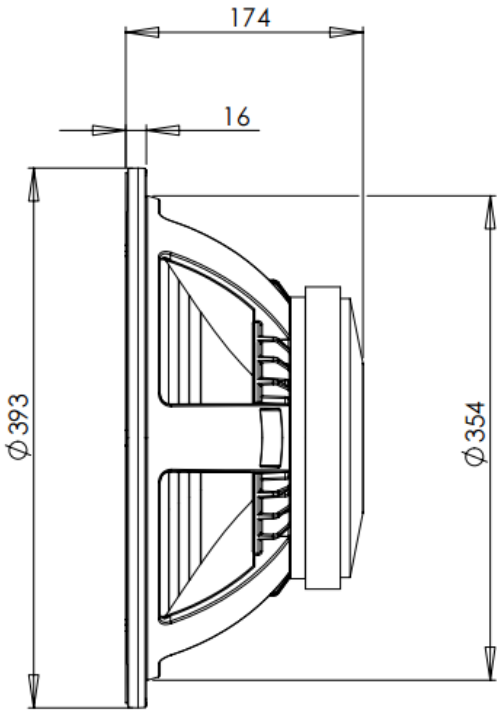

B&C SPEAKERS

Professional loudspeaker transducers since 1946

B&C Speakers S.p.A. Via Poggiomoro, 1 - Loc. Vallina, 50012 Bagno a Ripoli (FI) | ITALY
Tel. +39 055 65721 | Fax +39 055 6572312 | mail@bcspeakers.com