18PS100 4 Ω

Subwoofer

- 1400 W continuous program power capacity
- 100 mm (4 in) copper voice coil
- 30 - 1000 Hz response
- 94 dB sensitivity
- Double silicone spider with optimized compliance





B&C Speakers S.p.A. Via Poggiomoro, 1 - Loc. Vallina, 50012 Bagno a Ripoli (FI) | ITALY
Tel. +39 055 65721 | Fax +39 055 6572312 | mail@bcspeakers.com

18PS100 4 Ω

Subwoofer

SPECIFICATIONS

Nominal Diameter	**460 mm (18 in)**
Nominal Impedance	**4 Ω**
Minimum Impedance	**4.6 Ω**
Nominal Power Handling 2 hours test made with continuous pink noise signal within the range Fs-10Fs. Power calculated on rated minumum impedance. Loudspeaker in free air.	**700 W**
Continuous Power Handling Power on Continuous Program is defined as 3 dB greater than the Nominal rating.	**1400 W**
Sensitivity Applied RMS Voltage is set to 2 V for 4 ohms Nominal Impedance.	**94 dB**
Frequency Range	**30 Hz - 1000 Hz**
Voice Coil Diameter	**100 mm (4 in)**
Winding Material	**Copper**
Former Material	**Glass Fibre**
Winding Depth	**19 mm (0.75 in)**
Magnetic Gap Depth	**10.5 mm (0.41 in)**
Flux Density	**1.05 T**
Woofer Cone Treatment	**TWP Waterproof Both Sides**

PARAMETERS

Thiele-Small parameters are measured after a high level 20 Hz sine wave preconditioning test.

Fs	**30 Hz**
Re	**3.8 Ω**
Qes	**0.42**
Qms	**9.1**
Qts	**0.4**
Vas	**251 dm³ (8.86 ft³)**
Sd	**1210 cm² (187.55 in²)**
η0	**1.46 %**
Xmax	**7 mm**
Xvar	**9 mm**
Mms	**239 g**
Bl	**20 Tm**
Le	**1.35 mH**
EBP	**71 Hz**

DESIGN

Surround Shape	**Triple Roll**
Cone Shape	**Radial**
Magnet Material	**Ferrite**
Spider	**Double Silicone**
Pole Design	**T-Pole**
Woofer Cone Treatment	**TWP Waterproof Both Sides**
Recommended Enclosure	**250 dm³ (8.83 ft³)**
Recommended Tuning	**29 Hz**

MOUNTING AND SHIPPING INFO

Overall Diameter	**460 mm (18.11 in)**
Bolt Circle Diameter	**440 mm (17.32 in)**
Baffle Cutout Diameter	**422 mm (16.61 in)**
Depth	**197 mm (7.76 in)**
Flange and Gasket Thickness	**16 mm (0.63 in)**
Air Volume Occupied by Driver	**9.5 dm³ (0.34 ft³)**
Net Weight	**10.2 kg (22.49 lb)**
Shipping Units	**1 pcs**
Shipping Weight	**11.8 kg (26.01 lb)**
Shipping Box	**500x495x275 mm (19.69x19.49x10.83 in)**

SERVICE KITS

LF recone-kits	**RCK18PS1004**

B&C Speakers S.p.A. Via Poggiomoro, 1 - Loc. Vallina, 50012 Bagno a Ripoli (FI) | ITALY
Tel. +39 055 65721 | Fax +39 055 6572312 | mail@bcspeakers.com

18PS100 4 Ω

Subwoofer

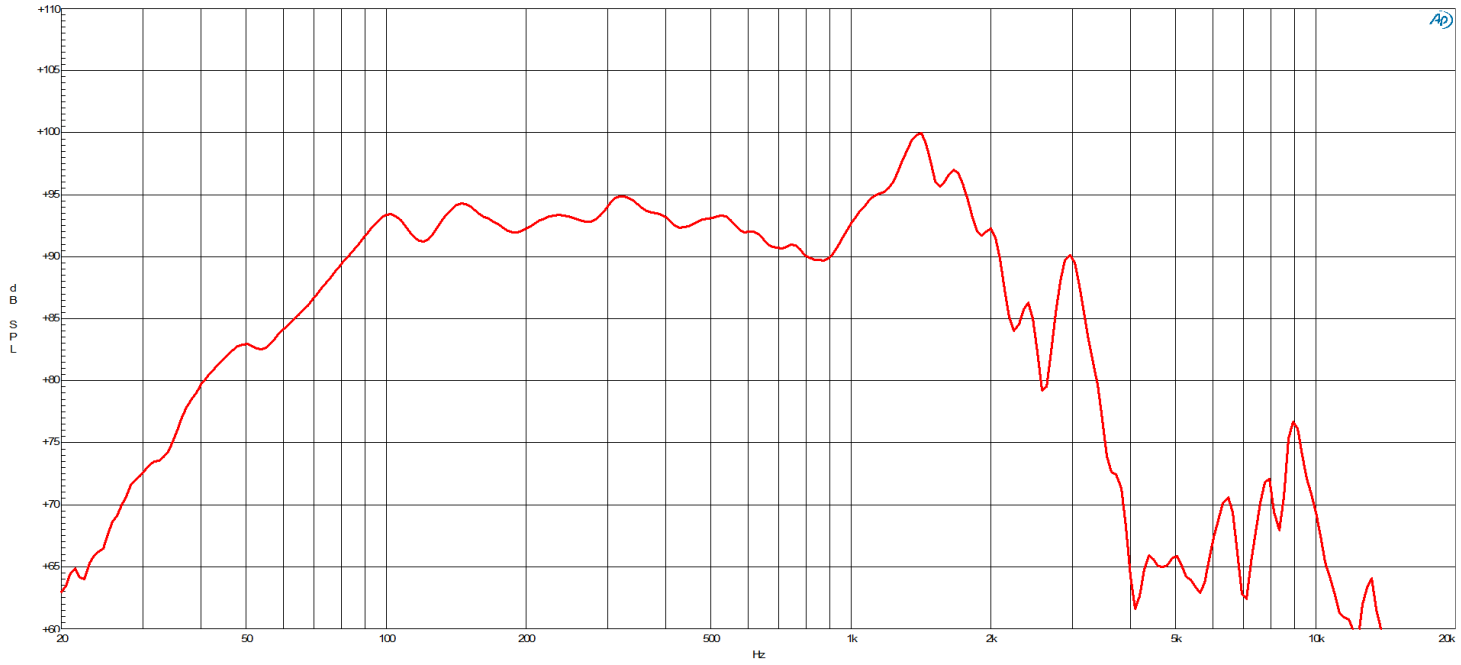

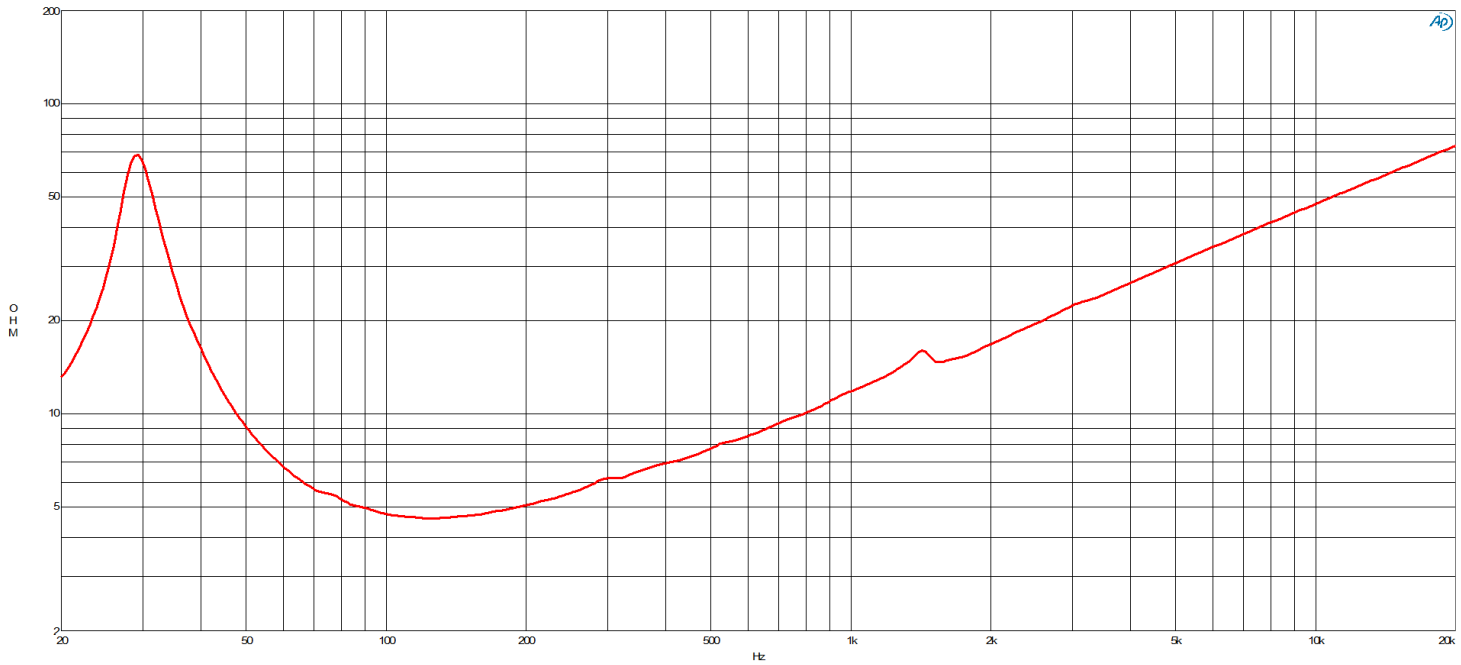

B&C Speakers S.p.A. Via Poggiomoro, 1 - Loc. Vallina, 50012 Bagno a Ripoli (FI) | ITALY
Tel. +39 055 65721 | Fax +39 055 6572312 | mail@bcspeakers.com

18PS100 4 Ω

Subwoofer

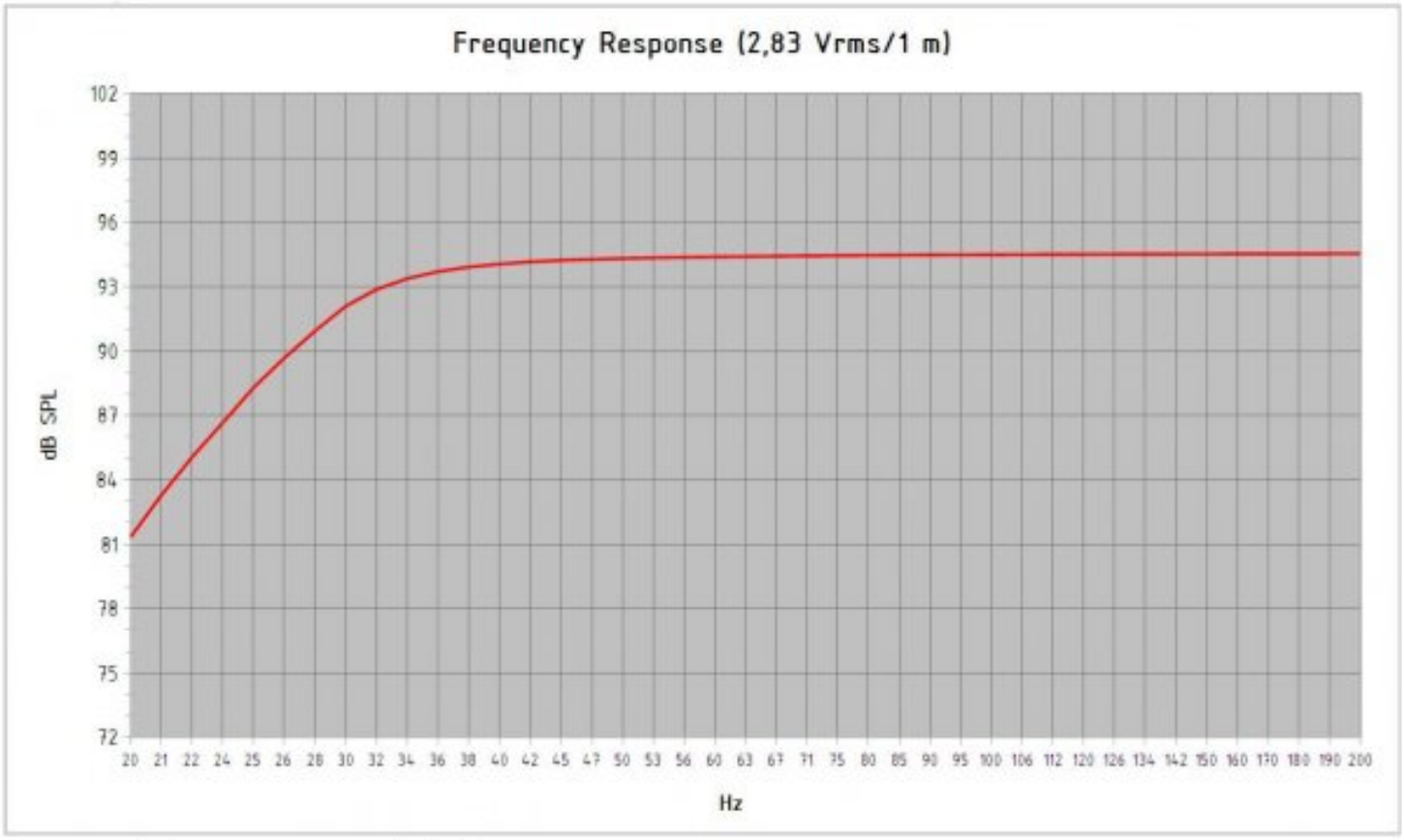

Model:	***18 PS 100***				
Enclosure Type:	***Bass Reflex***				
Internal Net Volume (Liters):	***250***				
Tuning Frequency (Hz):	***29***	*Port Area (cm²):*	***339,6***		
Frequency (-3 dB) (Hz):	***29,1***	*Port Length (cm):*	***30,4***		
Excursion Limited Maximum SPL at 1 meter (dB):	***115,5***	*equal to*	***156,9***	*Watts*	*(Bass Band Power Rating)*
Thermal Limited Maximum SPL at 1 meter (dB):	***122,0***	*equal to*	***700,0***	*Watts*	*(Mid Band Power Rating)*

B&C Speakers S.p.A. Via Poggiomoro, 1 - Loc. Vallina, 50012 Bagno a Ripoli (FI) | ITALY
Tel. +39 055 65721 | Fax +39 055 6572312 | mail@bcspeakers.com

18PS100 4 Ω

Subwoofer

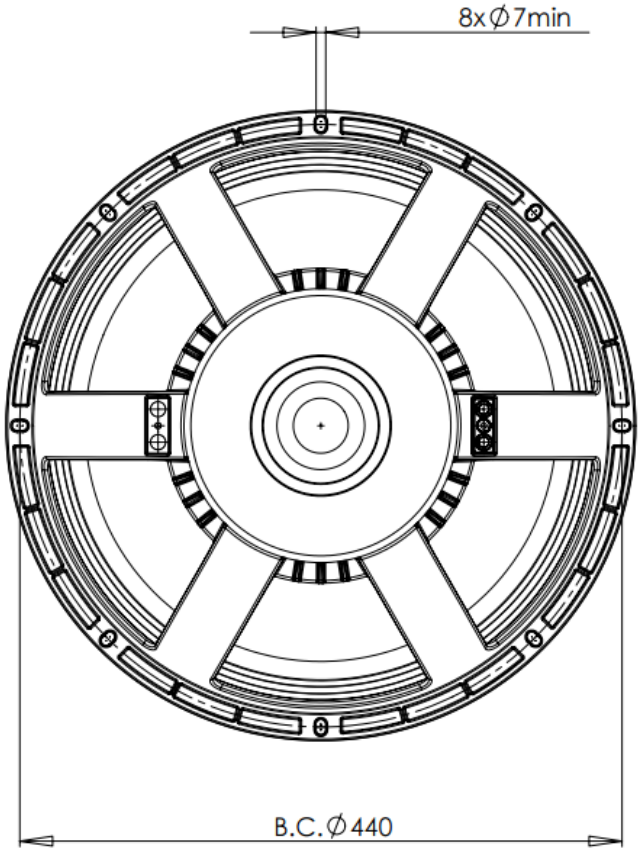

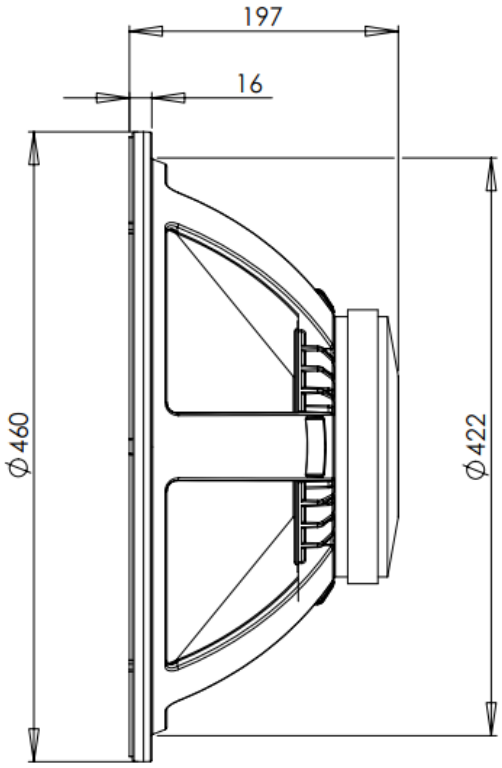

B&C SPEAKERS

Professional loudspeaker transducers since 1946

B&C Speakers S.p.A. Via Poggiomoro, 1 - Loc. Vallina, 50012 Bagno a Ripoli (FI) | ITALY
Tel. +39 055 65721 | Fax +39 055 6572312 | mail@bcspeakers.com