21SW152 8 Ω

Subwoofer

- 4000 W continuous program power capacity
- 153 mm (6 in) split winding copper voice coil
- 30 - 1000 Hz response
- 96 dB sensitivity
- Neodymium magnet allows a very high force factor and linear excursion
- Double silicone spider with optimized compliance
- Ventilated voice coil gap for reduced power compression
- Aluminium demodulating ring for very low distortion





B&C Speakers S.p.A. Via Poggiomoro, 1 - Loc. Vallina, 50012 Bagno a Ripoli (FI) | ITALY
Tel. +39 055 65721 | Fax +39 055 6572312 | mail@bcspeakers.com

21SW152 8 Ω

Subwoofer

SPECIFICATIONS

Nominal Diameter	**530 mm (21 in)**
Nominal Impedance	**8 Ω**
Minimum Impedance	**7 Ω**
Nominal Power Handling 2 hours test made with continuous pink noise signal within the range Fs-10Fs. Power calculated on rated minumum impedance. Loudspeaker in free air.	**2000 W**
Continuous Power Handling Power on Continuous Program is defined as 3 dB greater than the Nominal rating.	**4000 W**
Sensitivity Applied RMS Voltage is set to 2.83 V for 8 ohms Nominal Impedance.	**96 dB**
Frequency Range	**30 Hz - 1000 Hz**
Voice Coil Diameter	**153 mm (6 in)**
Winding Material	**Copper**
Former Material	**Glass Fibre**
Winding Depth	**32 mm (1.26 in)**
Magnetic Gap Depth	**12 mm (0.5 in)**
Flux Density	**1.2 T**
Woofer Cone Treatment	**TWP Waterproof Both Sides**

PARAMETERS

Thiele-Small parameters are measured after a high level 20 Hz sine wave preconditioning test.

Fs	**32 Hz**
Re	**6 Ω**
Qes	**0.38**
Qms	**6.4**
Qts	**0.36**
Vas	**200 dm³ (7.06 ft³)**
Sd	**1680 cm² (260.4 in²)**
η0	**1.9 %**
Xmax	**15 mm**
Xvar	**16 mm**
Mms	**450 g**
Bl	**39 Tm**
Le	**2.2 mH**
EBP	**84 Hz**

DESIGN

Surround Shape	**Triple Roll**
Cone Shape	**Radial**
Magnet Material	**Neodymium Inside Slug**
Spider	**Double Silicone**
Pole Design	**T-Pole**
Woofer Cone Treatment	**TWP Waterproof Both Sides**
Recommended Enclosure	**190 dm³ (6.71 ft³)**
Recommended Tuning	**33 Hz**

MOUNTING AND SHIPPING INFO

Overall Diameter	**547 mm (21.54 in)**
Bolt Circle Diameter	**527 mm (20.75 in)**
Baffle Cutout Diameter	**508 mm (20 in)**
Depth	**261 mm (10.28 in)**
Flange and Gasket Thickness	**16 mm (0.63 in)**
Air Volume Occupied by Driver	**16 dm³ (0.57 ft³)**
Net Weight	**18.5 kg (40.79 lb)**
Shipping Units	**1 pcs**
Shipping Weight	**20.8 kg (45.86 lb)**
Shipping Box	**570x570x320 mm (22.44x22.44x12.60 in)**

SERVICE KITS

LF recone-kits	**RCK21SW1528**

B&C Speakers S.p.A. Via Poggiomoro, 1 - Loc. Vallina, 50012 Bagno a Ripoli (FI) | ITALY
Tel. +39 055 65721 | Fax +39 055 6572312 | mail@bcspeakers.com

21SW152 8 Ω

Subwoofer

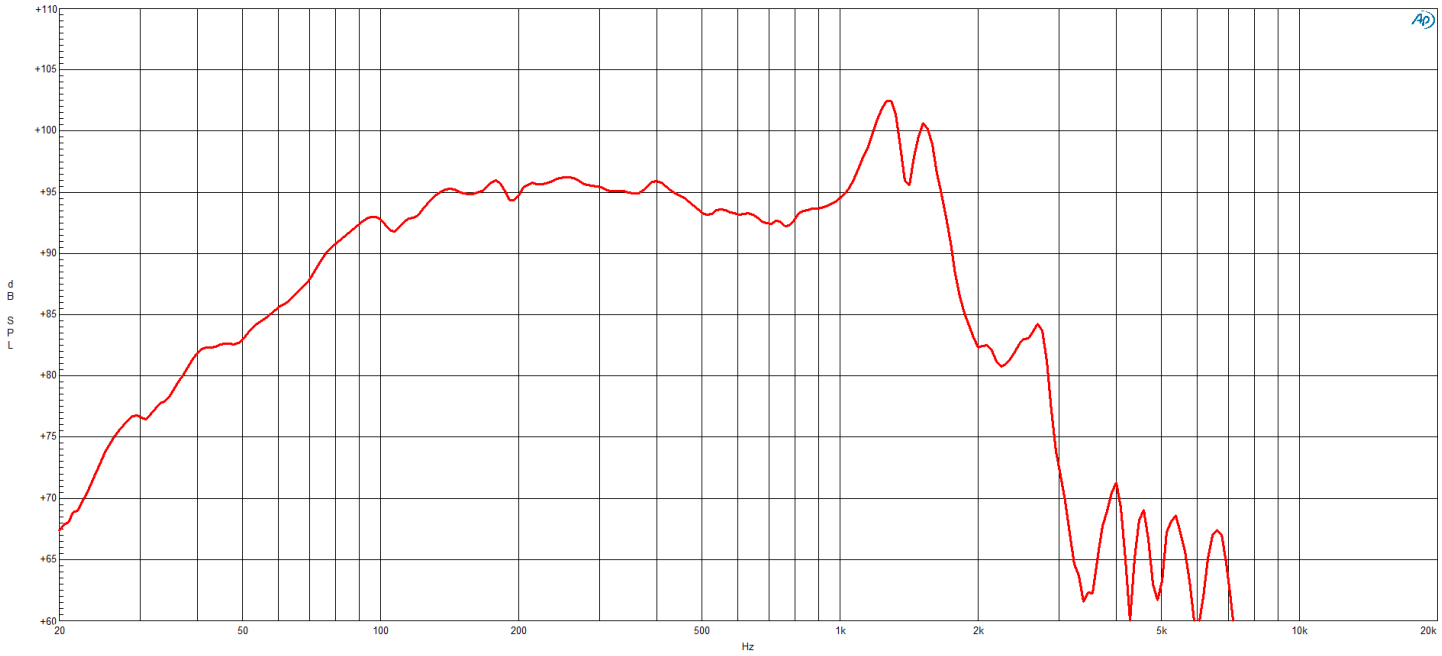

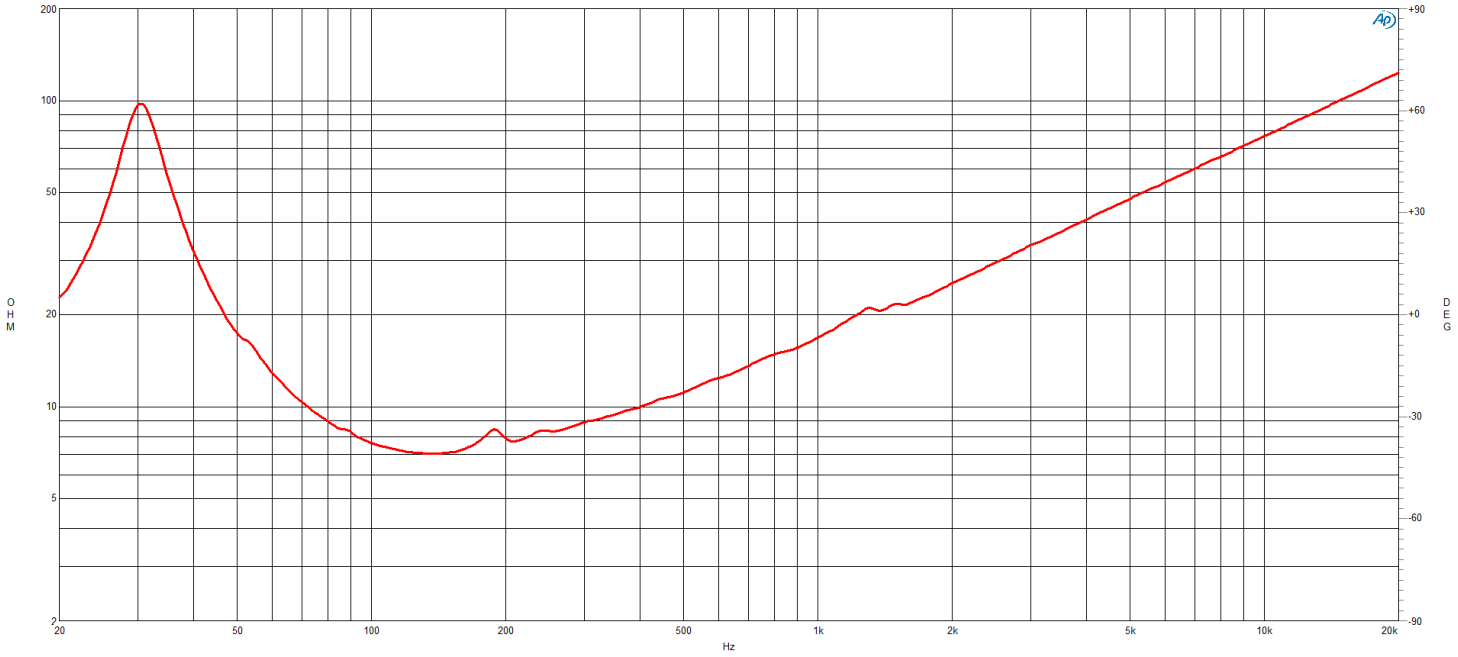

B&C Speakers S.p.A. Via Poggiomoro, 1 - Loc. Vallina, 50012 Bagno a Ripoli (FI) | ITALY
Tel. +39 055 65721 | Fax +39 055 6572312 | mail@bcspeakers.com

21SW152 8 Ω

Subwoofer

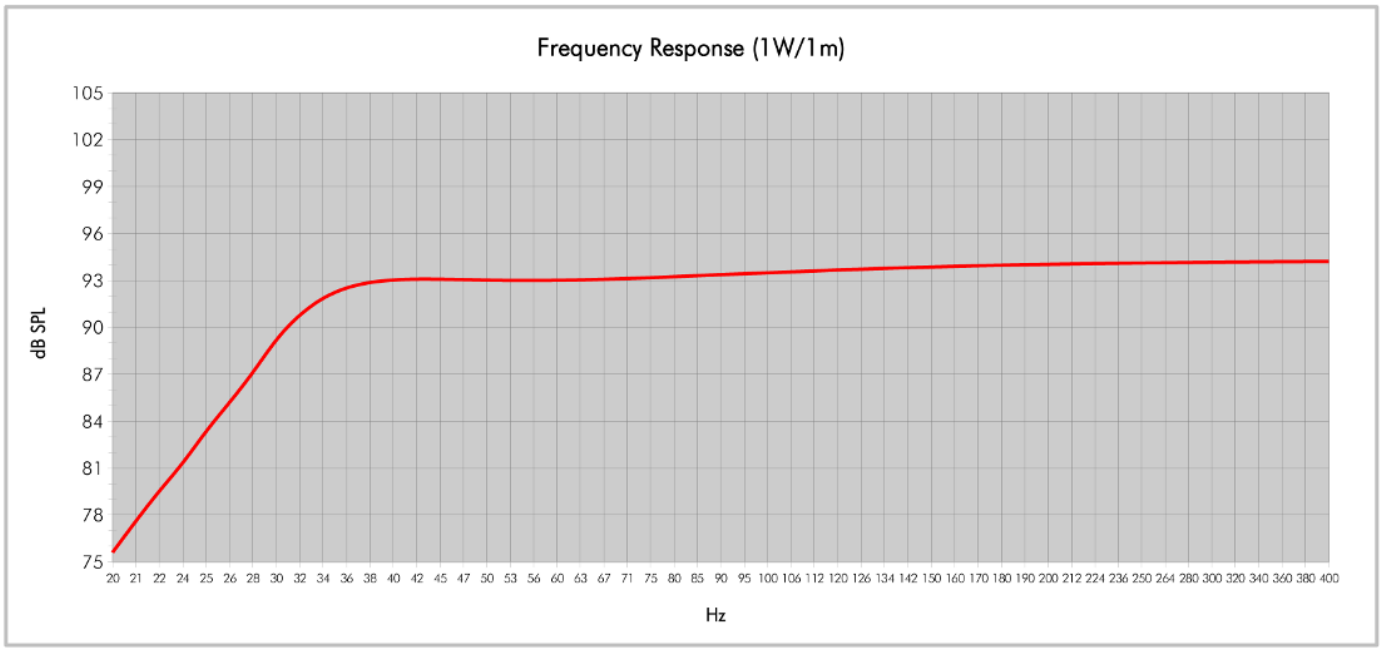

Model:	21SW152		
Enclosure Type:	Bass Reflex	Configuration:	One Driver
Internal Net Volume (Litres):	190	QB:	7
Tuning Frequency (Hz):	33	Port Area (cm²):	480,0
Frequency (-3 dB) (Hz):	33,0	Port Length (cm):	48,3
Frequency (-10 dB) (Hz):	25,7		

B&C Speakers S.p.A. Via Poggiomoro, 1 - Loc. Vallina, 50012 Bagno a Ripoli (FI) | ITALY
Tel. +39 055 65721 | Fax +39 055 6572312 | mail@bcspeakers.com

21SW152 8 Ω

Subwoofer

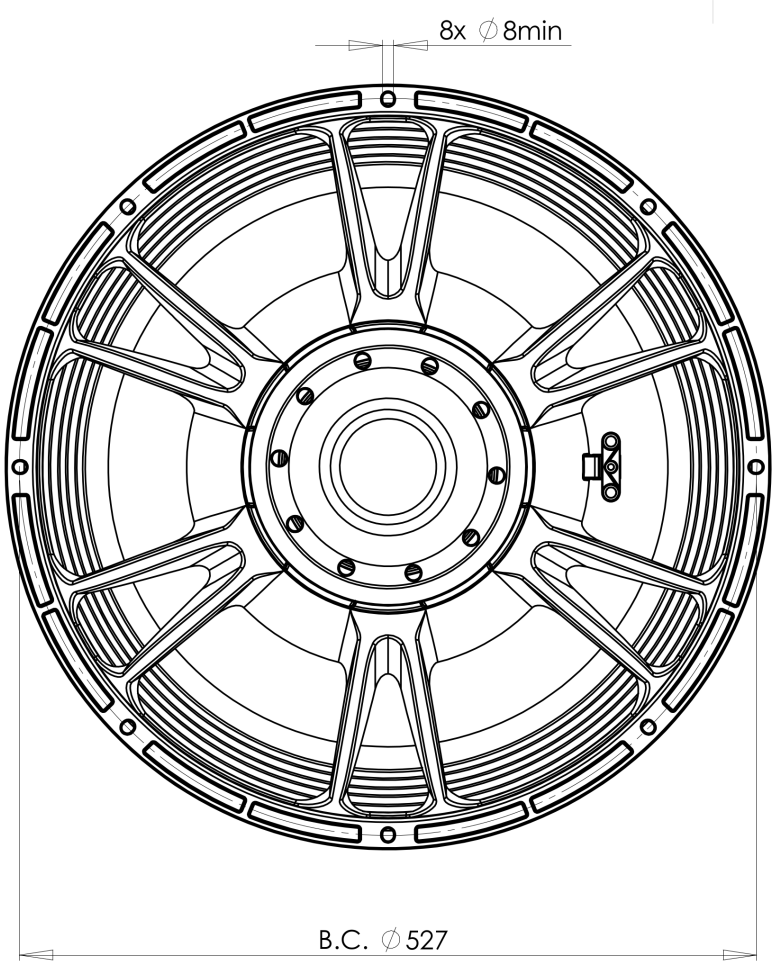

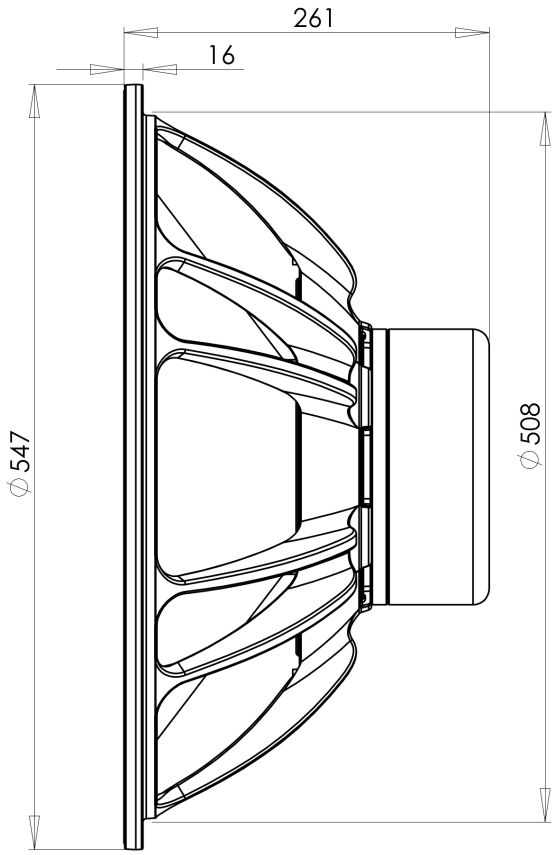

B&C Speakers S.p.A. Via Poggiomoro, 1 - Loc. Vallina, 50012 Bagno a Ripoli (FI) | ITALY
Tel. +39 055 65721 | Fax +39 055 6572312 | mail@bcspeakers.com